Radio Receivers

DEPARTMENT OF THE AIR FORCE

AIR FORCE MANUAL*
NUMBER 100-5

DEPARTMENT OF THE AIR FORCE
WASHINGTON, D. C. 14 DECEMBER 1956

FOREWORD

This Manual is published to serve as a training text and guide for repairmen and technicians. It covers the field of radio receivers, in sufficient detail, to enable the student to understand the operation, repair, and adjustment of basic communications receivers. The information contained in the Manual also gives the student an adequate background for studying specific Air Force receivers.

There is a general discussion of the fundamentals of radio reception followed by explanations of tuned-radio-frequency and superheterodyne receivers. Descriptions of ordinary communications receivers, and very-high-frequency and ultra-high-frequency receivers are discussed in detail. The latest techniques in receiver design, such as the use of subminiature tubes and plug-in units, are incorporated in the next chapters, followed by explanations of frequency modulation and special purpose receivers. The Manual ends with discussions of performance tests and trouble-shooting techniques.

We invite you to send recommendations and or comments for the improvement of this Manual to the Director of Personnel Procurement and Training, Headquarters USAF, Washington 25, D. C.

BY ORDER OF THE SECRETARY OF THE AIR FORCE:

N. F. TWINING
Chief of Staff, United States Air Force

OFFICIAL:

E. E. TORO
Colonel, USAF
Air Adjutant General

DISTRIBUTION:

Zone of Interior and Overseas	
Headquarters USAF	300
Major Air Commands	5
Except:	
Air Training Command (for training purposes)	3,140
Subordinate Air Commands	3
Wings	2
Bases	1
Groups	2
Special**	

*This Manual supersedes Air Training Command Manual 52-9, December 1953.

**Commanders may requisition additional copies for issue to individuals possessing primary AFSC's in the 30- career fields whose duties require knowledge of receiver principles and circuits.

FOR SALE BY THE SUPERINTENDENT OF DOCUMENTS
REPRINTED 15 NOVEMBER 1958

introduction

A radio receiver is the other half of a communications network—the first half, so to speak, is the radio transmitter. The two halves are linked by radio waves that are radiated from the transmitting antenna and intercepted by the receiving antenna.

Like transmitters, receivers are usually classified and taught as a part of either airborne or ground equipment. In the airborne field, you will become either an Electronic Communications Equipment Repairman or an Electronic Navigation Equipment Repairman. In ground equipment maintenance, you will become either a Radio Repairman or a Radio Technician.

This manual is designed to serve as a basic text in both fields, since basic receiver theory applies equally well to both airborne and ground receivers.

Once you have mastered the operation of the basic receiver circuits presented in this manual, you will have little difficulty understanding the operation of any receiver that you will be required to maintain and service. Actually the only differences between receivers are frequency range, arrangement of stages, types of tubes used in the various stages, and the physical location of the various controls.

contents

CHAPTER 1 Fundamentals of Radio Reception . . Page 1

2 TRF Receiver 7

3 Superheterodyne Receiver 29

4 Communications Receiver 41

5 VHF and UHF Receivers 85

6 Frequency Modulation 105

7 Special Purpose Receivers 129

8 Performance Tests and Troubleshooting Techniques 157

Index 174

CHAPTER 1

FUNDAMENTALS OF RADIO RECEPTION

The receiver has the job of completing the communications cycle started by the transmitter. It must intercept some of the RF (radio frequency) energy radiated by the transmitter — separate the intelligence from the RF — and reproduce the intelligence as energy in some meaningful form, such as sound, light, or mechanical energy. What a receiver is, and how it performs its communication job, is discussed in the following pages.

GENERAL REQUIREMENTS OF RECEIVERS

Frequency Coverage

The frequency coverage of a receiver is the range of RF which it can handle.

Consider frequency range from the point of view of a receiver. Radiated frequencies may range anywhere from 10 kc to above 30,000 mc. However, no practical receiver has yet been constructed that will handle this entire range successfully. This range constitutes too big a chunk of frequencies. Even talking about it clearly requires that it be divided up a bit, as shown in the frequency spectrum chart below.

Another kind of division is shown in the frequency allocation chart on page 2. This is based on the purpose for which the frequencies are used. A receiver might handle a complete band or only part of a band. At most, it will handle only two or three bands. Thus, the broadcast receiver has a frequency coverage of 550 kc to 1600 kc, a complete band, while some receivers used in Air Force communications have a frequency coverage of 225 mc to 399.9 mc, only part of a band.

Sensitivity

The *sensitivity* of a receiver is the measure of its ability to intercept weak signals and extract intelligence from them.

A receiver intercepts many radiations. These radiations may originate from transmitters operating anywhere within the radio frequency spectrum. They may originate from transmitters located anywhere in the world. They may also originate from transmitters of wide-

RADIO FREQUENCY SPECTRUM

Frequency Band		Designation	Abbreviation
KC	MC		
10-30		Very Low	VLF
30-300		Low	LF
300-3,000		Medium	MF
3,000-30,000	3-30	High	HF
30,000-300,000	30-300	Very High	VHF
300,000-3,000,000	300-3,000	Ultra High	UHF
3,000,000-30,000,000	3,000-30,000	Super High	SHF

FREQUENCY ALLOCATION		
Frequency Band	Wavelength (in meters)	Uses
400 mc	0.75	Experimental
400 mc 106 mc	2.83	Government, Aircraft, Police, Television
108 mc 88 mc	3.41	Frequency Modulation
88 mc 50 mc	6.82	Television
50 mc 1600 kc	187.5	Ship-to-Shore, Aircraft, Police, Foreign, Government, Point-to-point, Experimental
1600 kc 550 kc	545.45	Commercial broadcast
550 kc 20 kc	15,000	Government, Commercial, Maritime, Ship-to-Shore, Aircraft, Point-to-Point, High Power Government, Transoceanic

ly varying power output. Thus, the RF radiations intercepted by a receiver are of widely varying signal strength. A highly sensitive receiver does a good job of completing communication, whether signals are weak or strong.

Selectivity

Selectivity is the measure of a receiver's ability to intercept a desired signal and extract its intelligence to the exclusion of others. From the point of view of a receiver, the RF radiation that comes along is composed of a hodgepodge of various frequencies and various signal strengths. A highly selective receiver must be able to concentrate on one signal and reject all others, even those whose frequencies are close to the frequency of the desired signal.

Fidelity

While sensitivity and selectivity are the measure of radio receivers' ability to intercept a weak signal and to extract the intelligence from that signal to the exclusion of all others, *fidelity* is the measure of receivers' ability to reproduce the intelligence of the signal. A receiver designed primarily for entertainment requires a high degree of fidelity. It must reproduce faithfully the sounds and sights on which entertainment depends — for example, the music of a symphony orchestra, or the fine details of a television picture. The fidelity requirements for simple communication are not so high. Still, reproduction must be faithful enough to make the message intelligible. This means reproduction without undue distortion. Voice reproduction must be understandable. The reproduction of CW and MCW must be readable.

Physical Requirements

The components of a receiver are usually smaller and more compact than those of a transmitter. This is due chiefly to the fact that the power requirements of a receiver are less. As a result, power supply components are usually included right in the receiver unit. The actual size, weight, and cost of a receiver vary greatly, depending on the type and quality of operation the receiver is to perform. Communications receivers are usually of rugged construction. Receivers designed for mobile use are shock mounted.

BASIC REQUIREMENTS FOR RADIO RECEPTION

A simple practical receiver performs three essential operations — selection, detection, and reproduction. By selection, one RF signal is extracted from a multitude of RF signals. By detection, the intelligence is separated from the RF. By reproduction, the intelligence is turned into some type of energy which reproduces the intelligence. Each of these operations, with the exception of selection, is shown in the diagram, Simple Receiver.

Antenna

Actually an antenna in itself is a tuned circuit. It provides some selectivity. The Antenna Equivalent Circuit shows how an antenna can be a resonant circuit. La represents the distributed inductance of the antenna. Ca represents the distributed capacitance of the antenna. Ra represents the resistance of the antenna. The resonant frequency of an antenna

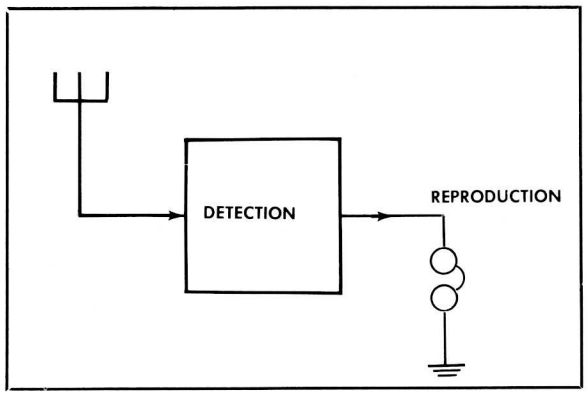

Simple Receiver

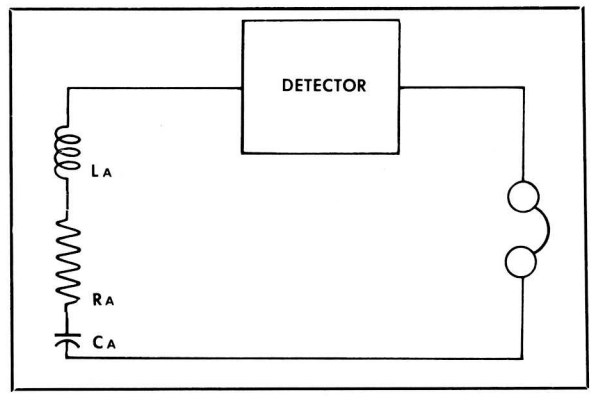

Antenna Equivalent Circuit

can be determined by the formula,

$$F\ (mc) = \frac{159}{\sqrt{LC}}$$

where L is in microhenries and C is in micro-microfarads. Substituting typical values (La = 50μh and Ca = 200 mmf) in the formula,

$$F\ (mc) = \frac{159}{\sqrt{(50)\ (200)}}$$

$$= 1.59\ mc$$

Note that frequency may be changed by varying L or C or both. When the antenna is a wire or a mast, L and C vary directly with antenna length. The longer the antenna, the lower the resonant frequency.

The resistance of the antenna will affect the sharpness of response of the tuned circuit. This is illustrated by the chart at the right, showing relative values of antenna current for varying values of resistance, with L and C remaining constant. Note that the smaller the resistance, the greater the response and the greater the selectivity of the antenna.

An antenna can be tuned in construction by making its length correspond to a quarter or half wavelength or a multiple of a quarter wavelength of a desired frequency. An antenna may also be provided with a means of varying its length for operational purposes.

At high frequencies, the selectivity provided by antenna tuning can be very critical and very important. At those frequencies antennas are short, and their resistance is kept as small as possible. A slightly detuned antenna may make a receiver inoperative.

At low frequencies, antennas are long, and reduction of internal reistance is less practical. Here, antenna tuning is usually much less critical. The gain provided in a receiver by amplifier stages far surpasses the gain obtained by antenna tuning. Antenna length has little importance in broadcast receivers.

However, in simple receivers such as the one under consideration, there are no amplifier stages to provide signal amplification. Here, antenna length is important both for the sensitivity and the selectivity of the receiver.

The receiver antenna intercepts the signal by being in the path of the radiated RF. When

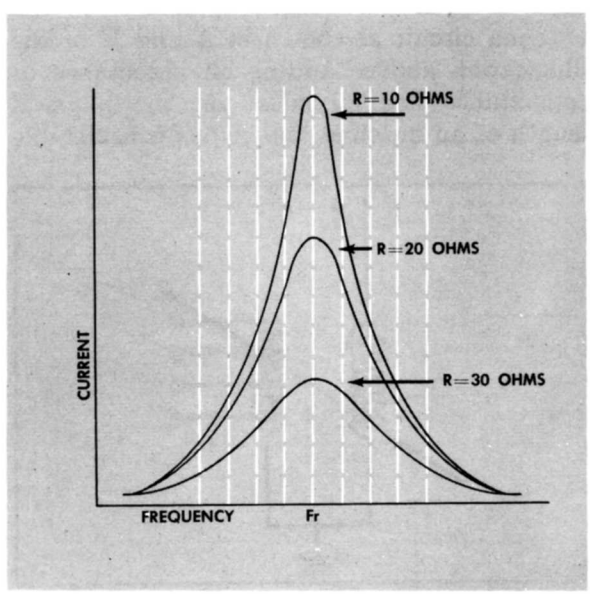

Effect of Resistance on Selectivity

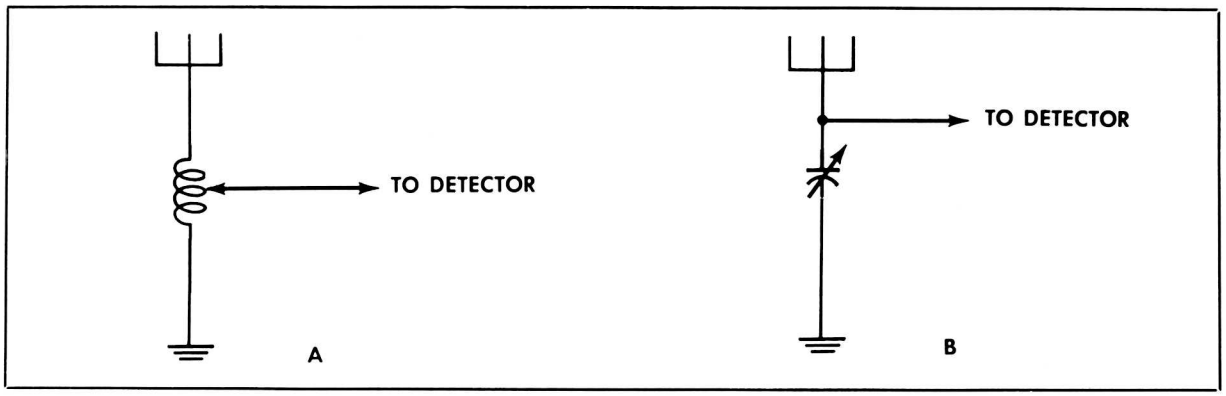

Variable Antenna Circuits

magnetic lines of force cut a conductor (the antenna) an emf is induced in the conductor. This induced voltage reproduces both the RF and any frequency or amplitude variations of the inducing voltage. The induced voltage is greatest when the antenna is tuned to the frequency of the inducing voltage. The induced voltage represents the intercepted energy needed for the first steps in the receiving process — interception and selection.

Tuning for Selectivity

As stated before, the resonant frequency of an antenna can be changed by varying antenna inductance, antenna capacitance, or both. This can be done by placing a variable inductance or a variable capacitance in the antenna circuit as shown in A and B of the illustration above. Adding an inductance or capacitance has no effect on the physical length of an antenna, but it has considerable effect on the electrical length. It is the electrical length which determines the resonant frequency of the antenna. When the added inductance or capacitance is variable, the electrical length of the antenna can be changed to achieve exact tuning for a desired signal.

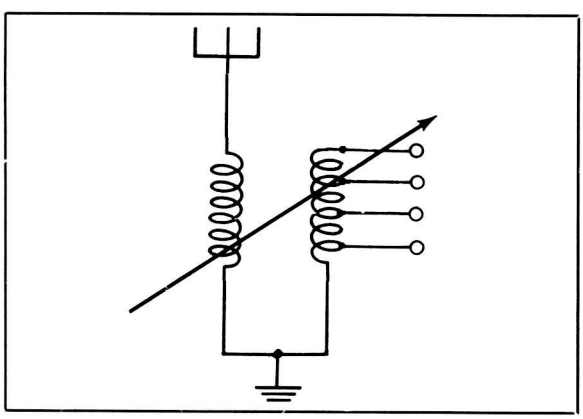

Variometer Tuning

The variometer, shown below, provides another means of changing antenna resonance by varying inductance. The taps on the secondary can be used to increase the tuning range.

Finally, higher selectivity can be obtained by coupling the received signal into a separate tuned circuit, as shown at the right. With such a selector circuit added, selection may be regarded as a separate step, distinct from antenna tuning. The antenna may then be regarded as being primarily for interception.

The use of a transformer improves both sensitivity and selectivity. The transformer steps up the voltage and isolates the tuned circuit from the resistance of the antenna. For tuning, either the capacitor or the coil could be made variable.

Detection

The process of separating the intelligence from the modulated RF signal is called *detection*. In the simple receiver shown, detection is accomplished with the help of a crystal detector. Detection is the opposite of modulation, and is sometimes called demodulation. In the receiver, here, detection separates the amplitude modulation from the carrier. The process of separating frequency modulation

from the carrier is somewhat different. It is discussed in chapter 6.

All detectors are essentially rectifiers. The crystal detector, shown in the illustration, conducts effectively only in one direction. Thus, when it is connected across the selector tank circuit, the crystal acts as a rectifier. Its output is a pulsating direct current, pulsing at the RF rate but at the AF (modulation) amplitude.

This is the first step in detection. The process is completed by filtering the pulsating DC. In the simple circuit shown here, the coils in the headset form part of the filter. They offer little impedance to AF but high impedance to RF. A capacitor across the headset completes the filter. It offers little impedance to RF but high impedance to AF. Thus the capacitor bypasses the RF around the headset while the AF signal goes through the headset.

Reproduction

The current flowing through the coils of the headset varies at an audio rate. If the current can cause vibrations in the air at the same rate, the vibrations will constitute sound. For the reproduction of sound, the energy of the magnetic field which surrounds the coils is used. The strength of the magnetic field varies as the current varies. In turn, it causes a metal diaphragm to move back and forth at the same rate. This sets up vibrations in the air and produces corresponding sound waves.

OPERATIONAL ANALYSIS OF A SIMPLE RADIO RECEIVER

To analyze the simple radio receiver, study the schematic diagram shown on page 6. In this schematic, are gathered together all the steps just discussed. The points to be considered in the analysis are — What are the essential components? — What are the functions of each component? — What are the changes made in the radio waves as they pass through the receiver?

The illustration shows the conventional connections of the components. It also gives a graphic representation of the wave as it passes through the receiver. When the radio wave passes or cuts across the antenna, RF voltage is induced across the antenna, and consequently across the primary of T1. The current flow in the primary of T1 (L1) induces current flow in the secondary. The antenna transformer usually has an air core and a step-up ratio. This allows a small amount of signal gain.

The secondary of T1 is a part of a series tuned circuit, made up of L2 and C1. Maximum circulating current flows through a series tuned circuit when the resonant frequency is applied. In addition, since maximum current flows at resonance, maximum reactive voltage is developed across each component. For maximum output from the headset, maximum voltage must be applied to the rectifier and the parallel combination of C2 and the headset. This results in a maximum

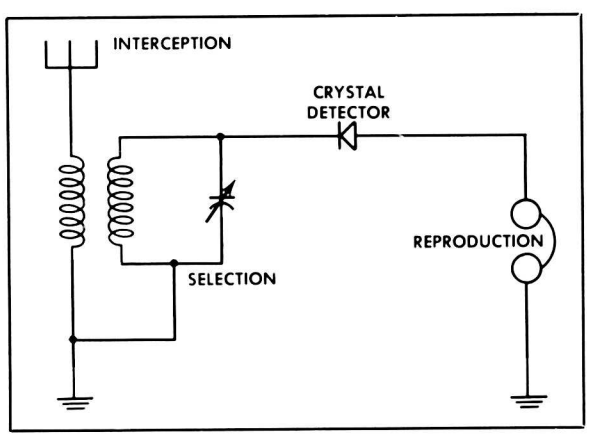

Simple Tunable Receiver

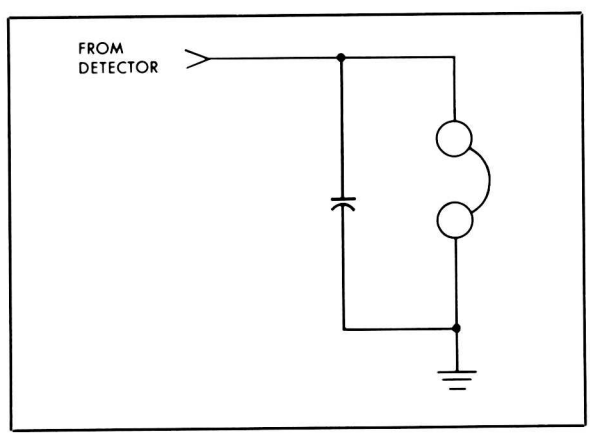

Detector Output Filtering

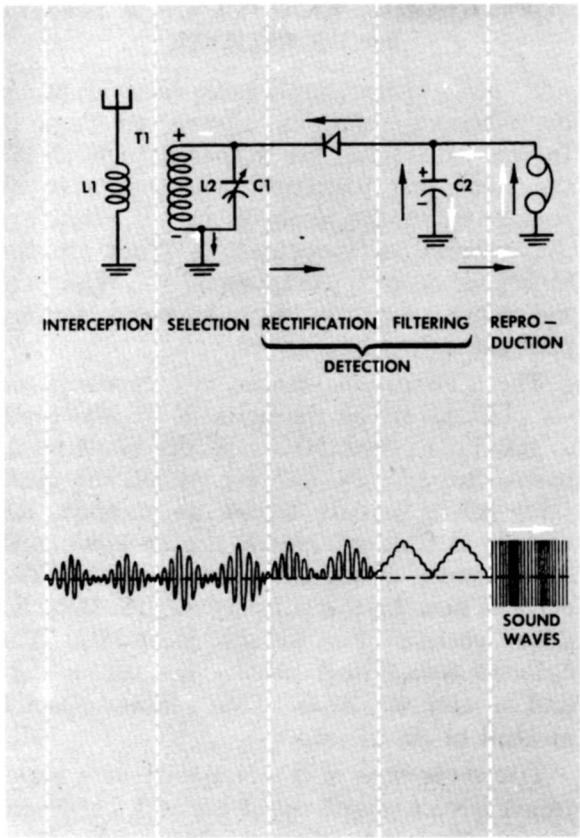

Simple Tunable Receiver Analysis

amount of current through the headset, and since the headset is a current device, there will be a maximum audio output. Actually, the tuned circuit (L2-C1) appears as a parallel circuit to the rectifier and the parallel-connected capacitor and headset, and one characteristic of a parallel circuit at resonance is that maximum voltage is developed across it.

The polarity at the extremities of the transformer changes with changes in the incoming signal. When the top of the tank circuit is positive, current flows through the circuit as indicated by the solid black arrows. When the top of the tank is negative, the crystal does not conduct, and the capacitor discharges as shown by the white arrows. Thus, the waveform is rectified, and the signal is changed to a pulsating DC. Note that the pulses still bear the imprint of the modulation after filtering, but this does not affect the intelligence.

Part of the filter is C2, a small capacitor, usually about 250 mmf. It filters the RF component of the pulsating DC. The capacitor charges during the half cycles that the crystal conducts and discharges partially when the crystal is not conducting. In its charging and discharging, it absorbs almost all the swing of the RF pulses and follows the pattern of the modulation envelope, as the waveform shows.

A headset changes current pulses to sound waves by application of the electromagnetic principle. Each receiver contains two coils, a U-shaped permanent magnet which serves as the core of the coils, and a flexible diaphragm. As current travels through the coils, a changing magnetic field is developed. The strength of this field determines how much the diaphragm is attracted. When the field strength decreases, the diaphragm pulls away. The mechanical vibrations of the diaphragm cause the sound which is the intelligence.

LIMITATIONS OF A SIMPLE RADIO RECEIVER

The simple receiver just described has its limitations. There is only one tuned circuit to improve the selectivity of the antenna. The slight step-up of the antenna transformer does little to improve the sensitivity of the receiver. This limits the effectiveness of the receiver to strong signals from nearby stations. On other signals, the output of the detector is not strong enough to develop magnetic fields around the headset coils to produce diaphragm vibrations.

An effective receiver needs more than the basic requirements. It must include circuits and stages to improve performance in terms of selectivity and sensitivity. It needs additional tuned circuits for selectivity. It needs RF amplifier stages to improve sensitivity. It needs AF amplifiers to increase audio output so that a speaker can be used to reproduce the intelligence. Such a receiver is shown in the block diagram of a tuned radio frequency receiver (TRF) on page 7. Typical stages of a TRF are discussed in chapter 2.

CHAPTER 2

TRF RECEIVER

The simple receiver studied in the previous chapter is classified as a single stage receiver, since neither the antenna nor the headset can be called a stage. The TRF receiver, on the other hand, is a multistage receiver. As shown in the block diagram, the detector of the TRF is the equivalent of the single stage of the simple receiver. The TRF is the more useful receiver because it has two RF amplifier stages, an AF (audio frequency) voltage amplifier stage, and an AF power amplifier stage.

In performance, the TRF far surpasses the simple receiver. The use of electron tubes makes the big difference. With the help of tubes, the number of steps which the receiver performs is expanded. The steps now are interception, selection, RF amplification, detection, AF amplification, and reproduction. Amplification, both of RF and AF, is the great advantage gained by using tubes.

ANTENNA CIRCUITS

The antenna coupling circuits used in connection with the TRF receiver are similar to those you studied in connection with the simple receiver. Usually, though, they are more elaborate. The RF energy which the antenna intercepts is applied to the grid of the first RF amplifier stage. In most cases, transformer coupling is used. This method offers the advantages of signal gain through the step-up action of the transformer.

Sometimes wavetraps are used with transformer coupling. A wavetrap is a device for preventing undesired signals from nearby transmitters or from extra powerful transmitters from drowning out desired signals

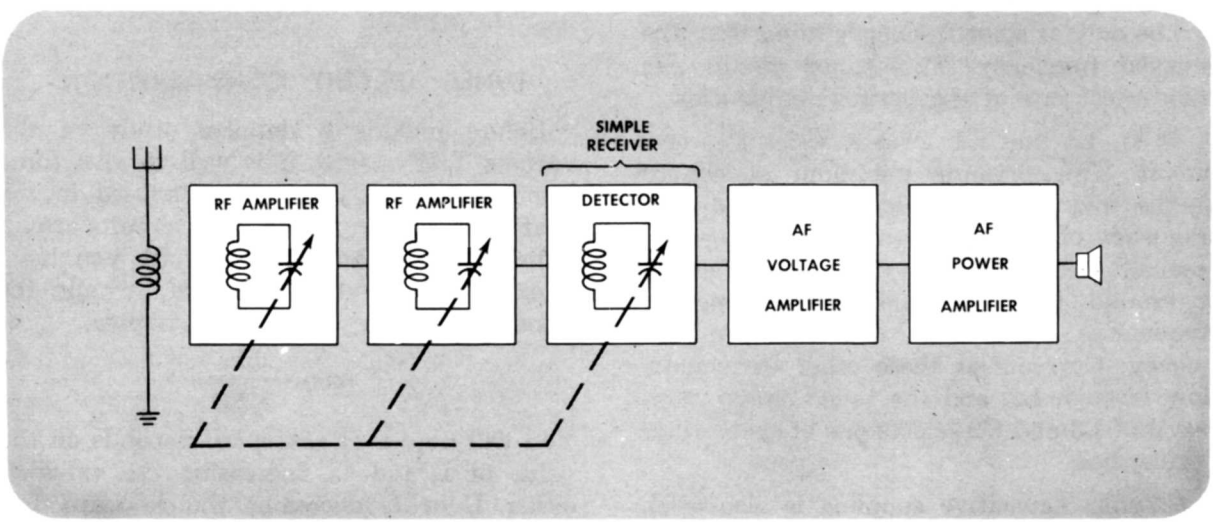

TRF Receiver

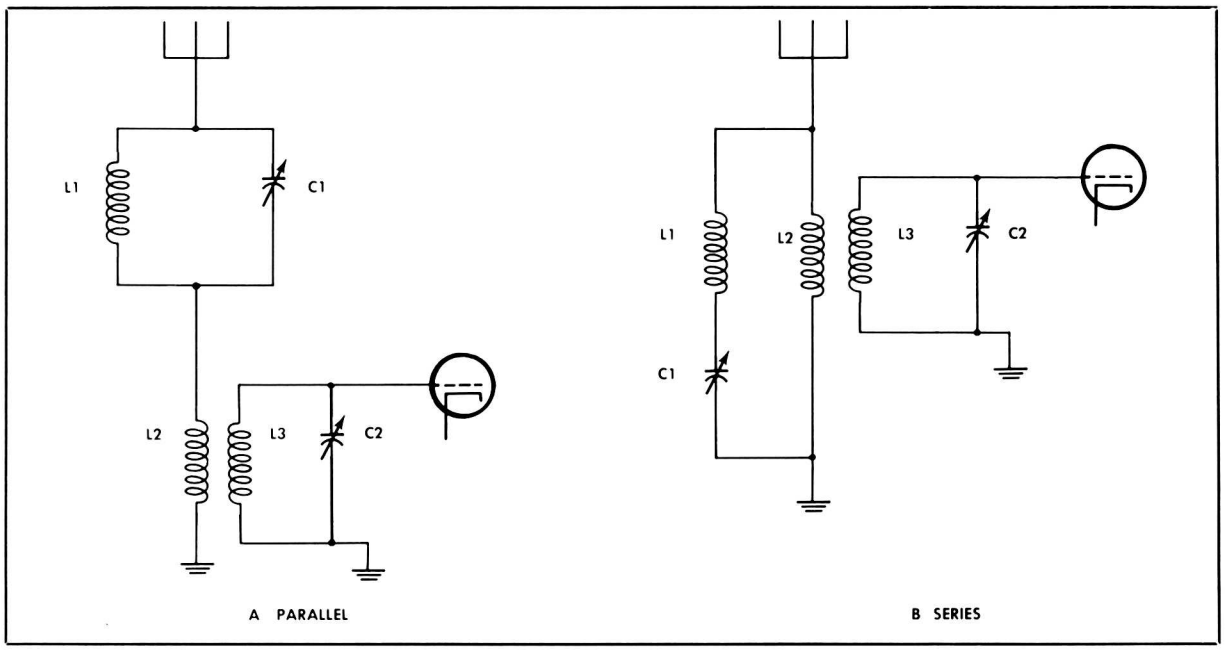

Wavetraps in Antenna Circuits

from weaker or more distant transmitters. As shown above, these wavetraps may be parallel or series resonant circuits. Their use increases selectivity.

At A in the illustration, notice that L1 and C1 form a tunable parallel resonant circuit which presents maximum impedance to the frequency to which it is tuned—the frequency of the undesired signal. Thus, it rejects the unwanted signal. The current through L2 and the voltage across the tuned circuit, L3-C2, can be only at some frequency other than the rejected frequency. This tuned circuit can then select one of the desired frequencies.

At B, L1 and C1 form a series resonant circuit. This presents minimum impedance to the frequency to which it is tuned—the frequency of the undesired signal. This series resonant circuit bypasses the undesired signal to ground, but presents high impedance to frequencies other than the undesired frequency. Currents at these other frequencies flow through L2, and the tuned circuit composed of L3 and C2 selects one of these other frequencies.

Antenna capacitive coupling is also used, especially with a variable coupling capacitor. In the capacitive coupling illustration on page 9, the capacitor couples the antenna to the tuned circuit. This variable capacitor makes it possible to match antenna impedance to the impedance of the grid circuit to obtain maximum signal input.

In many modern broadcast receivers, a loop antenna is used. The loop circuit is a tuned circuit, for the inductance of the loop combines with the capacitance of the variable capacitor to form a tuned circuit.

TUNED CIRCUIT CONSIDERATIONS

Before making a detailed study of the various TRF stages, it is well to give some attention to the tuned circuits used in the TRF. Essentially, these tuned circuits are no different from the tuned circuits you have already studied. Recalling the formula for resonant frequency in the last chapter,

$$F\ (mc) = \frac{159}{\sqrt{LC}}$$

You will note that resonance depends on the value of L and C. Increasing the value of either L or C decreases the resonant frequency. Decreasing the value of either L or

C increases the resonant frequency. Changing the value of both may change the resonant frequency—or it may not. It depends on whether the *product* of L and C is changed. If L and C are changed so that their product remains the same, the frequency will remain the same. Thus, for the same frequency, L may be high and C low, or L may be low and C high.

You remember, though, that the L/C ratio is important to the Q of a tuned circuit. Since $Q = \frac{Z}{R}$, the ratio of impedance to resistance affects the Q.

If the resistance remains the same, raising L and lowering C gives a higher ratio of impedance to resistance and a higher Q. Lowering L and raising C gives a lower ratio of impedance to resistance and a lower Q. A high Q has the advantage of providing sharp tuning and high gain, thus improving selectivity and sensitivity. If the Q is too high, though, tuning is so sharp that it eliminates part of the sidebands and introduces distortion.

This all means that the makeup of the tuned circuit, in terms of L, C, and R, is of considerable importance.

The tuned circuits in the TRF are tunable, usually by means of variable capacitors. The capacitors are ganged so that they may be varied simultaneously by one control. The fact that the capacitors can be varied permits exact tuning for a desired frequency. The fact that the capacitors can be tuned over a range of frequencies provides the receiver with its frequency coverage.

Another way of tuning is by use of variable inductances. They can be ganged in the same way as the variable capacitors.

The tuned circuits used for the TRF receiver are essentially the same as the tuned circuits you have studied. Their individual parts, though, are modified to adapt them to the TRF.

RF Coils

An RF coil, such as the one shown on page 10, is designed for minimum loss. It uses a multistrand wire called "Litz" wire. This wire is made by weaving together a large number of fine insulated wires. Its AC resistance is low, and therefore the Q of the coil is high.

Very light cardboard is used for the coil form. The form is varnished both before and after winding, to prevent absorption of moisture. The physical size of coil and form is kept as small as possible. The width of the mass of wound wire is usually about equal to its depth, as shown. The form contains both primary and secondary windings. The primary may be wound near the secondary or directly over the secondary.

A shield covers the coil and shields it from electric and/or magnetic fields which might induce unwanted voltages. The shield must be a good conductor to shield against electric fields. Aluminum is usually used because it is light, cheap, and a good conductor. Shielding of coils results in some reduction of efficiency, due to eddy currents induced in the shield by the magnetic field of the coil. These eddy currents produce a magnetic field of their own

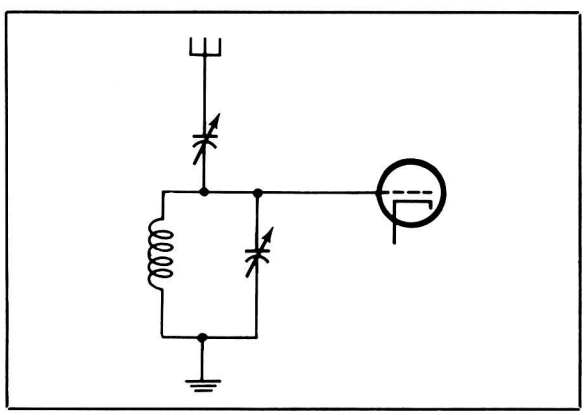

Capacitive Coupling From Antenna

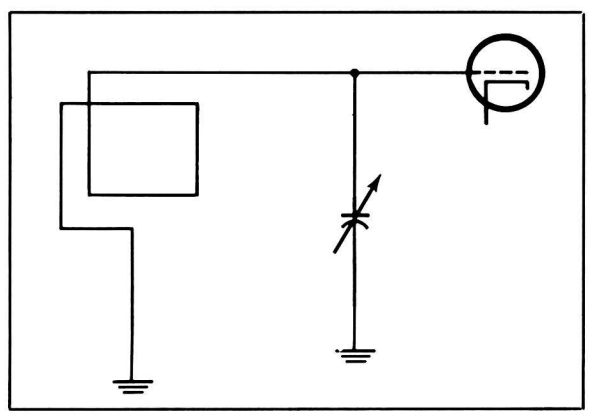

Loop Antenna

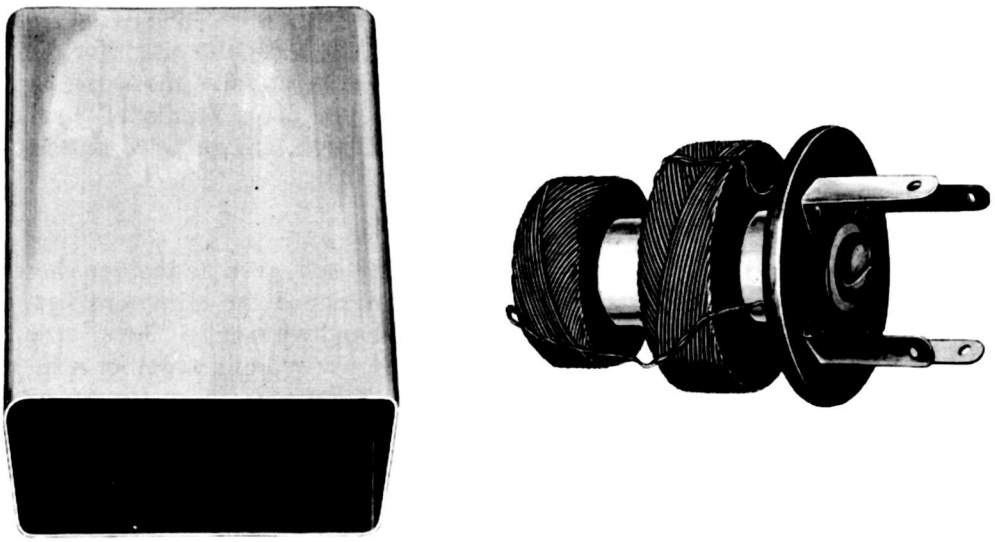

Typical RF Coil with Shield

which opposes the field of the coil. The loss of efficiency due to eddy currents is limited to approximately 15% by using a shield with a diameter twice the diameter of the coil. The shield should be well grounded.

RF coils usually have air cores. A few designed for low and medium frequencies have powdered iron cores. The cores are sometimes adjustable. As the iron core moves into the coil, inductance increases and the frequency of the tuned circuit decreases. A brass core can be used for the opposite effect. As the brass core is moved into the coil, inductance decreases and frequency increases. In either case, the circuit can be tuned by moving the core. This is called *permeability tuning.*

Variable Capacitors

Variable capacitors for RF tuned circuits are somewhat bulky. The plates, both rotor and stator, are usually aluminum, but better receivers sometimes use silver-plated brass capacitors for improved RF conductivity.

The calibration pattern of a variable capacitor depends on the shape of its rotor, as shown on page 11. For calibration, capacitors fall into three classifications — straight line capacity, straight line wavelength, and straight line frequency.

With the straight line capacity type, capacity increases directly with the amount of rotation. Since frequency does not increase directly with the decrease in capacitance, calibration puts the upper half of a frequency band in about one-eighth of the dial rotation.

With the straight line wavelength type, wavelength increases directly with the amount of rotation. In this type, the upper half of the band appears on one-third of the dial rotation.

With the straight line frequency type, frequency varies directly with the amount of rotation. This permits linear dial calibration. With this type variable capacitor, a tuned circuit has the same sharpness of tuning over its whole band.

The TRF can use any number of RF amplifier stages, but usually it has no more than three. In each TRF there is one more tuned circuit than there are RF amplifier stages. The extra RF tuned circuit, of course, is in the detector stage. When these tuned circuits are controlled by variable capacitors, it is advantageous to have the capacitors tunable by a single control. This can be done by ganging the capacitors, as shown at the right. This means that the capacitors are mounted in line with their rotors attached to a common shaft. Grounded partitions act as shields. They

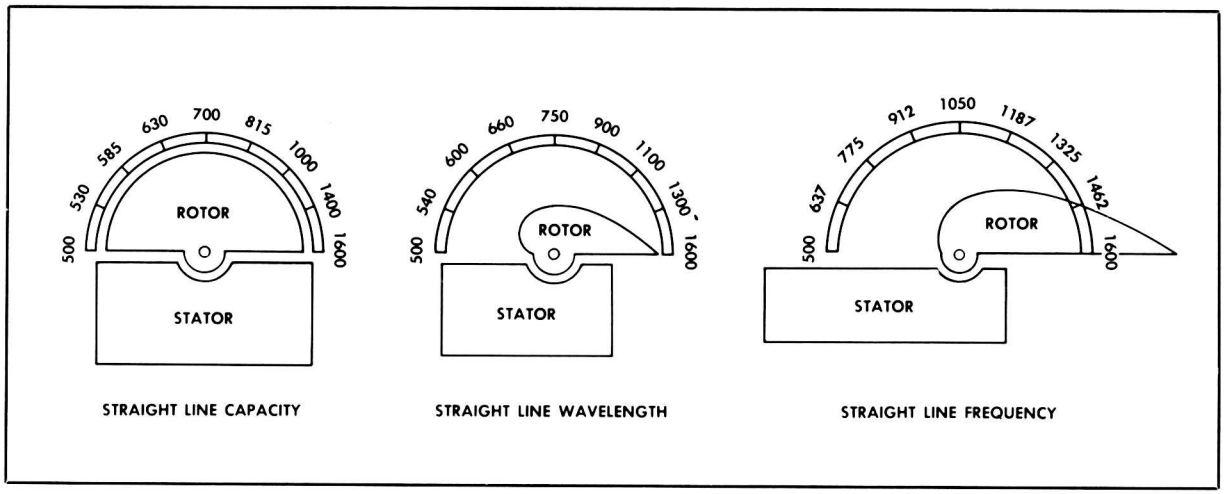

Variable Capacitors

provide electrical separation between the stator sections of the ganged capacitors.

It is almost impossible to manufacture a set of ganged capacitors of exactly the same capacitance. Similarly, it is difficult to keep each one of a set of ganged capacitors at the same capacitance. Even a slight bending of a single plate of a capacitor will change its value. Still, it is necessary for capacitors to "track"—that is, to maintain equal capacitances at each setting of the rotor. To compensate for differences, therefore, each of the ganged capacitors is provided with a small additional capacitor. It is screwdriver adjustable, and is called a *trimmer*. It is connected in parallel with the main tuning capacitor section. (See illustration on top of page 12.)

To make further adjustment possible, the outer rotor plates on each section are usually slotted, as shown in the illustration of a slotted plate on page 12. The slots make it easy to bend part of a plate and slightly change the capacitance of one section.

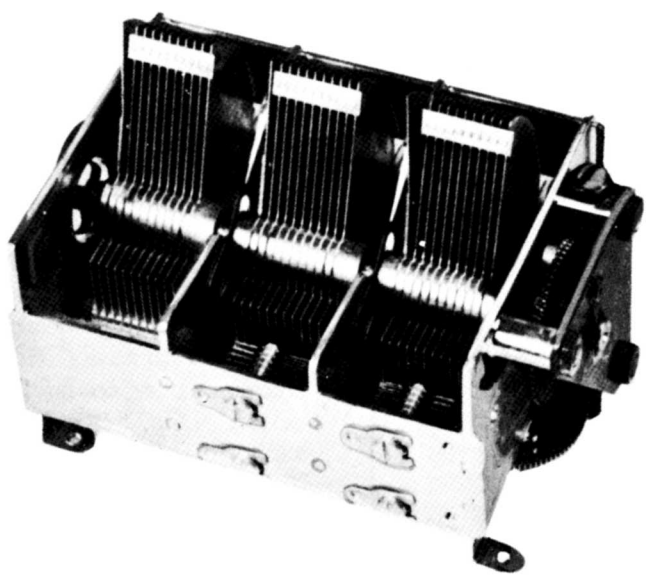

Ganged Tuning Capacitor

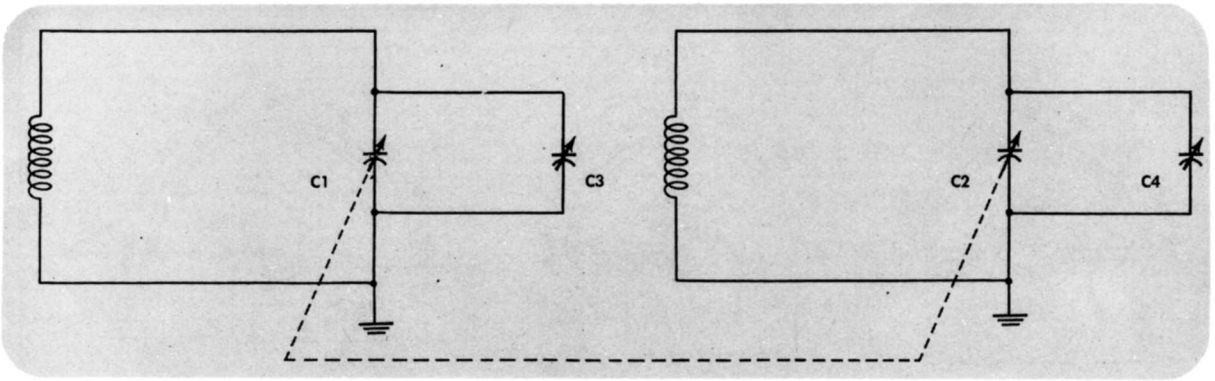

Trimmers Used for Tracking

Band Switching

TRF receivers frequently operate over several bands. Switching from one band to another requires switching from one set of tuned circuits to another. Usually the new set of circuits is formed partially out of the old set by substituting different components for either L or C. Since variable capacitors are bulky, it is practical to use as few as possible. Generally, therefore, it is the coils that are changed to form the tuned circuits for the new band. This can be done by use of a series of plug-in type coils, or by use of a switching arrangement. Where a switching arrangement is used, a single coil form may include windings for one, two, or three bands. A rotary wafer switch, such as the one on page 13, is used to switch in the desired set of coils. The switch connects the proper coils to the capacitor section, and, at the same time, grounds all unused coils. As you see, the switch shown has three wafers. When the shaft is turned, metal contacts fastened to the inner portion move from one contact point to another along the outside portion. Each setting of the switch makes a combination of connections for one band.

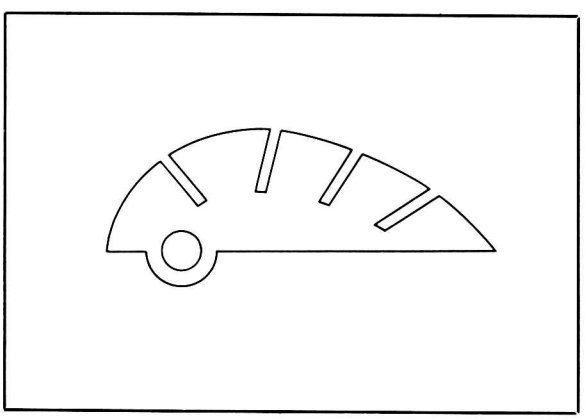

Slotted Rotor Plate

You can see the electrical equivalent of two switching arrangements at the right. A shows an arrangement for placing different coils into the circuit with one variable capacitor. B shows an arrangement for switching different capacitors in series with one variable capacitor.

Bandspreading

In a multiband receiver, each band has a different bandwidth. Still it is desirable for each band to occupy the entire range of the tuning dial. For example, the broadcast band extends from 550 kc to 1600 kc, a frequency ratio of about 3 to 1 and a frequency coverage across 1050 kc of tuning range. When a dial for this band rotates 180°, it covers about 5 kc for each degree of rotation. Shifting to a new band may bring about a situation where the tuning range occupies only a portion of the dial range and where many kilocycles of frequency are covered for each degree of rotation. This concentration of frequencies in each degree of rotation makes dial reading difficult. To correct this, the band is spread until it more closely approximates the full dial rotation.

Bandspreading can be accomplished by mechanical means. The mechanical arrange-

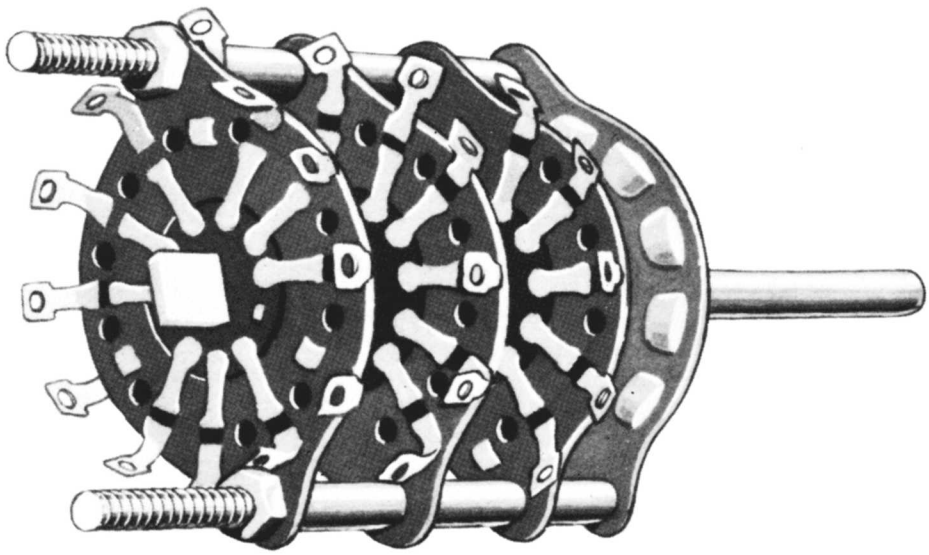

Rotary Switch for Band Switching

ment uses gears which coordinate the rotation of the dial with the rotation of the variable capacitor. But this method is expensive and is used only with precision equipment.

Bandspreading can also be accomplished electrically by using trimmer and padder capacitors, as shown on page 14. These capacitors can affect the minimum to maximum capacitance of a circuit. To increase the bandspread, a variable trimmer, C2, is connected in parallel with the main tuning capacitor. To decrease the maximum capacitance without changing the minimum value appreciably, a padder or series capacitor, C3, is used.

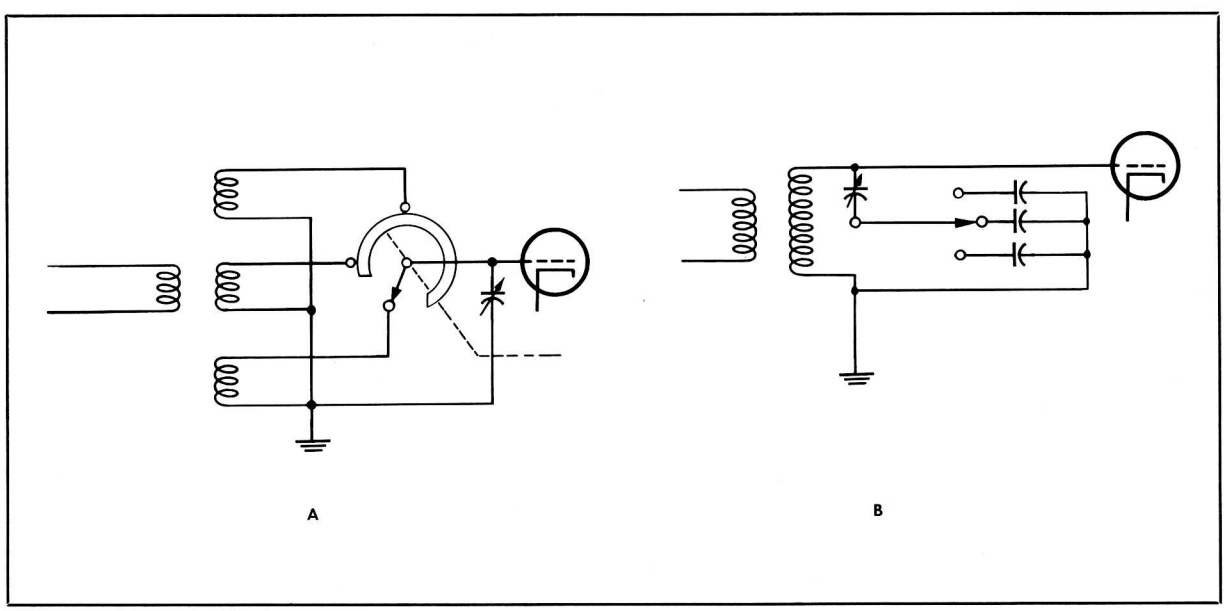

Band Change Circuits

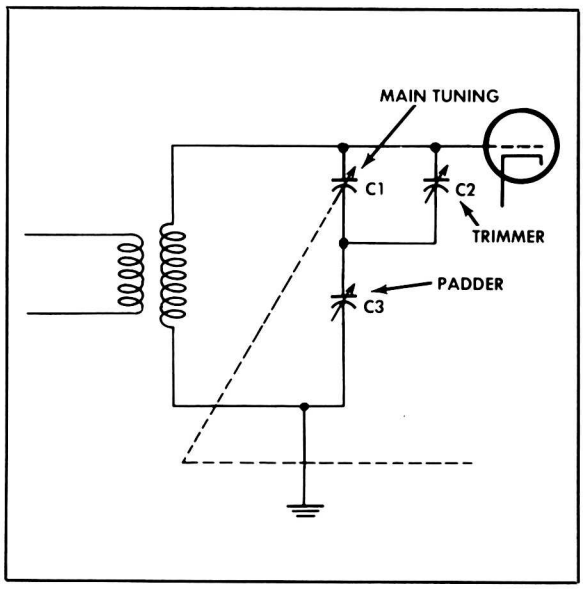

Bandspread Circuit

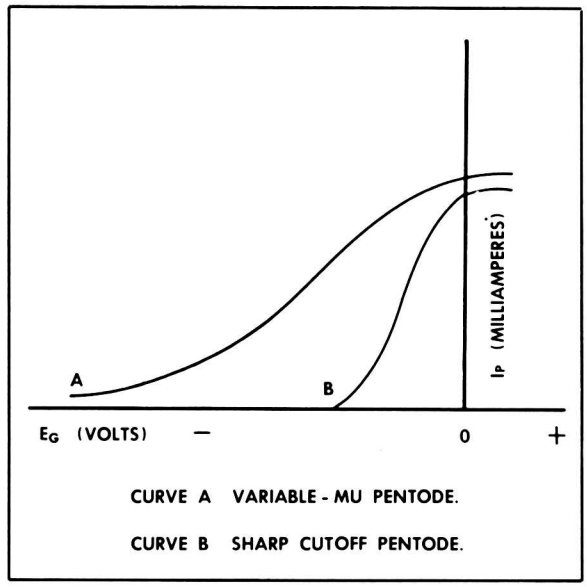

Pentode Response Curves

THE TUNED CIRCUIT AT VHF AND UHF

The use of the ordinary tuned circuit for VHF and UHF is impractical. At such frequencies, both L and C become so small that the connecting leads of the coil may have more inductance than the coil itself, and the distributed capacitance of the coil may exceed the capacitance of the variable capacitor. Under such conditions, successful tuning is impractical. Thus, it is common practice to use resonant sections of transmission lines for tuning frequencies above 100 mc. A quarter wavelength resonant line has capacitance and inductance. It is a tuned circuit. This type of tuned circuit will be discussed further in the chapter on VHF and UHF receivers.

AMPLIFIER TUBE CONSIDERATIONS

Triodes, tetrodes, or pentodes may be used in TRF receivers. The use of pentodes is most common, for pentodes provide much greater amplification, with little danger of oscillation.

Remote cutoff (variable-mu) or sharp cutoff tubes may be used. Notice the difference in response of these two types as shown above.

The remote cutoff tube is used in circuits with adjustable bias for controlling the gain of a stage without impairing linearity of amplification. With a remote cutoff tube, signal strength may vary considerably without danger of distortion. Some useful remote cutoff tubes are the 6K7, 6SK7, 6SG7, 6BE6, 6AV6, and 6AB7. These tubes cut off at bias voltages of −15 to −45 volts. Class A operation is possible up to the cutoff point.

The sharp cutoff tubes, such as the 6SJ7, 6SH7, or 7V7, have higher transconductances than remote cutoff tubes. They can be used where signal strength is low and high gain is desired, as in the first amplifier stage. They can also be used where signal strength is relatively constant.

TRF AMPLIFIER TUBES AT VHF AND UHF

In the VHF and UHF ranges, specially constructed tubes are used. Input impedance must be high, or gain is limited and tuning is broadened. At 60 mc, a normal RF amplifier tube may have an input impedance of 2500 ohms, while a specially constructed tube may have an input impedance of 54,000 ohms.

The specially constructed tube is very small physically, with closely spaced electrodes and no base. To reduce interelectrode capacitance and lead inductance, tube connections are brought out to short wire pins sealed in the glass envelope. The close electrode spacing keeps transit time down to the point necessary for UHF operation. The reduced electrode area

means reduced interelectrode capacitance. These tubes can be used for frequencies as high as 600 mc. Some examples are acorn tubes 954 and 956.

TRF AMPLIFIER CIRCUIT

Examine the typical RF amplifier stage shown below. The tube is a remote cutoff pentode. The antenna is transformer coupled through a tuned circuit to the grid of the pentode. Cathode bias is provided. The variable resistor in the cathode circuit permits adjustment of the operating bias. The output of the stage is transformer coupled to the next stage.

The RF signal is passed through several such TRF amplifier stages before it is applied to the detector stage. As the signal goes through the three or four tuned circuits, selectivity is greatly improved because each tuned circuit passes the resonant frequency and attenuates the other frequencies. The sensitivity is greatly increased because each tube amplifies the signal.

DETECTOR CIRCUITS

Detection involves rectification and filtering, as explained before in the simple receiver analysis. In most modern receivers, the detector uses an electron tube for rectification. Six types of tube circuits are used: diode detector, plate detector, infinite impedance detector, grid leak detector, regenerative detector, and superregenerative detector. The diode detector is the most common.

Diode Detector

Examine the diode detector circuit shown on page 16. Note that no DC plate voltage is used. The RF voltage across the tuned circuit, L2-C1, is applied across the diode. Since current flows only when the plate is positive in respect to the cathode, the RF voltage is rectified. When the plate is positive, the diode conducts and the capacitor in the filter circuit, C2, charges. When the plate is negative, no current flows in the tube, and C2 partially discharges through R1, the load resistor. However, the value of R1 is so high that the capacitor discharges only slightly before the tube again conducts. This means that the charge on the capacitor follows the positive peaks of the RF voltage. Since the shape of the modulation envelope can be traced in the variations of the RF peaks, the charge on the capacitor reproduces the AF modulation voltages.

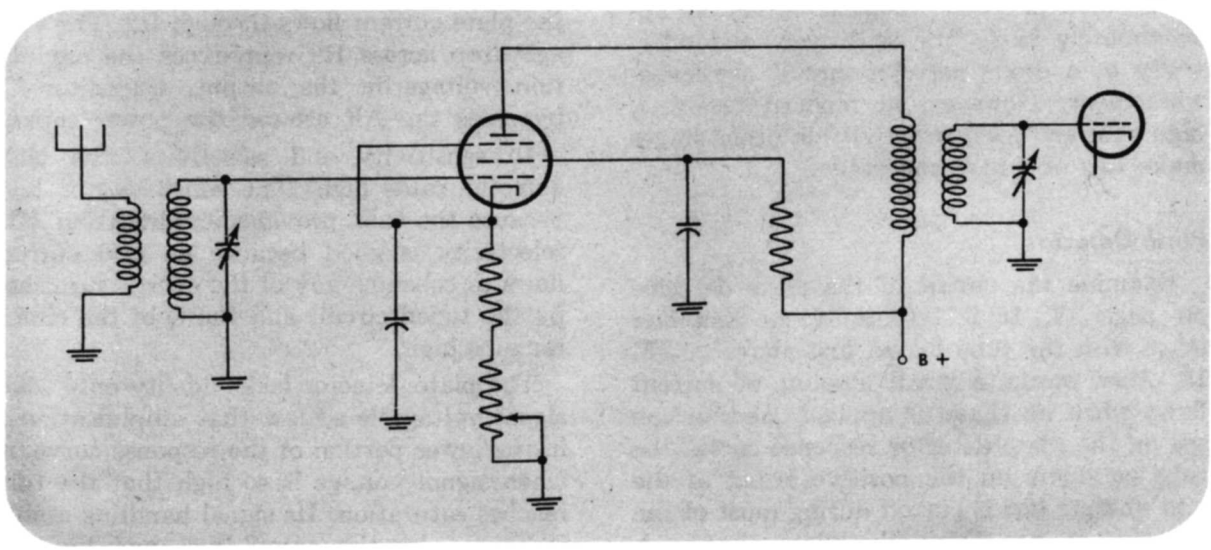

RF Amplifier

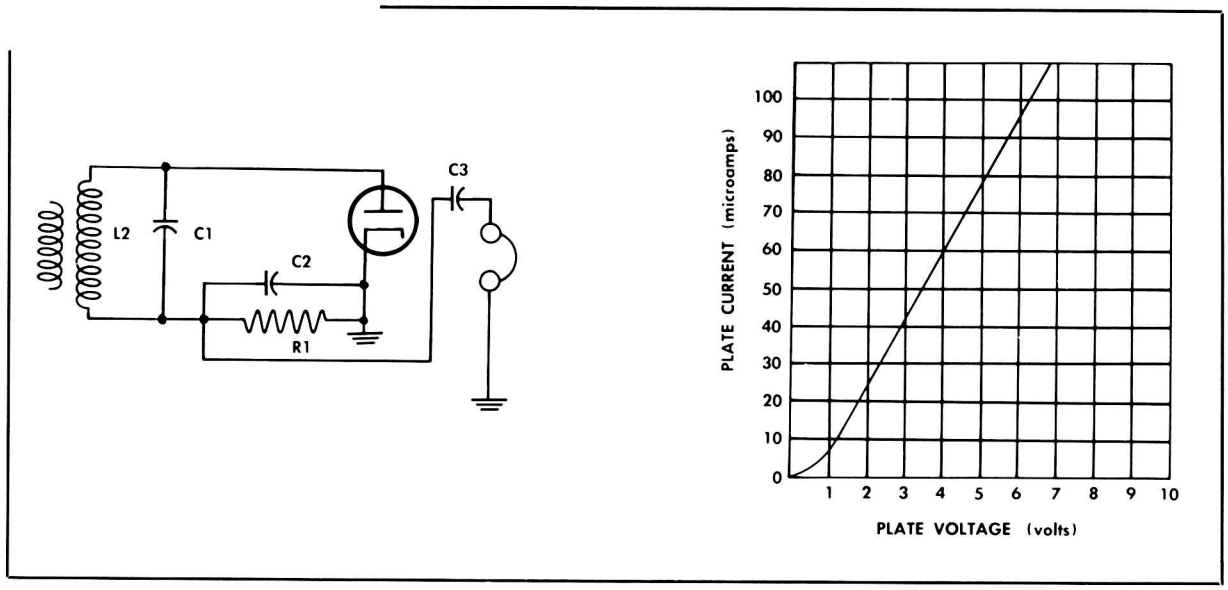

Diode Detector and Response Curve

As you can see from the graph in B, the voltage-current response of a diode is linear except when plate voltage is very low. This means that with any reasonable signal strength, diode response is always linear, up to the point of plate saturation. Fidelity is high, even for signals that approach 100% modulation. The signal handling ability of a diode is very high. It can handle signals of almost any amplitude. The efficiency of a diode, in a properly designed circuit, is approximately 90%. The sensitivity and selectivity of a diode detector circuit are somewhat poor. However, in modern receivers, high gain and good selectivity in other stages make this of minor importance.

Plate Detector

Examine the circuit of the plate detector on page 17. It is essentially an amplifier stage with the tube biased just above cutoff. In other words, a small amount of current flows when no signal is applied. As you can see on the plate detector response curve, the tube conducts on the positive swing of the grid voltage but is cut off during most of the negative swing. Thus, the plate current is DC, pulsating at an RF rate. The amplitude of these pulses follows the amplitude of the modulation (AF) voltage.

Cathode bias for the tube is provided by R1 and C2. C3 and L3 form a filter circuit. C3 presents high impedance to the AF component of the plate current, and low impedance to the RF. L3 presents low impedance to AF and high impedance to RF. Thus, the filter bypasses RF around the load resistor but passes AF to the output circuit.

R2 is the load resistor. The AF portion of the plate current flows through R2. The voltage drop across R2 reproduces the modulation voltage in the output. Capacitor C4 bypasses the AF around the power supply.

In sensitivity and selectivity, the plate detector rates high. The sensitivity is high because the tube provides amplification. The selectivity is good because no grid current flows to consume any of the energy furnished by the tuned circuit and the Q of the circuit remains high.

The plate detector lacks fidelity only when signal voltage is so low that amplification is in the lower portion of the response curve, or when signal voltage is so high that the tube reaches saturation. Its signal handling ability is limited by the cutoff bias, and by tube saturation. For most tubes, though, the signal handling ability may be considered good.

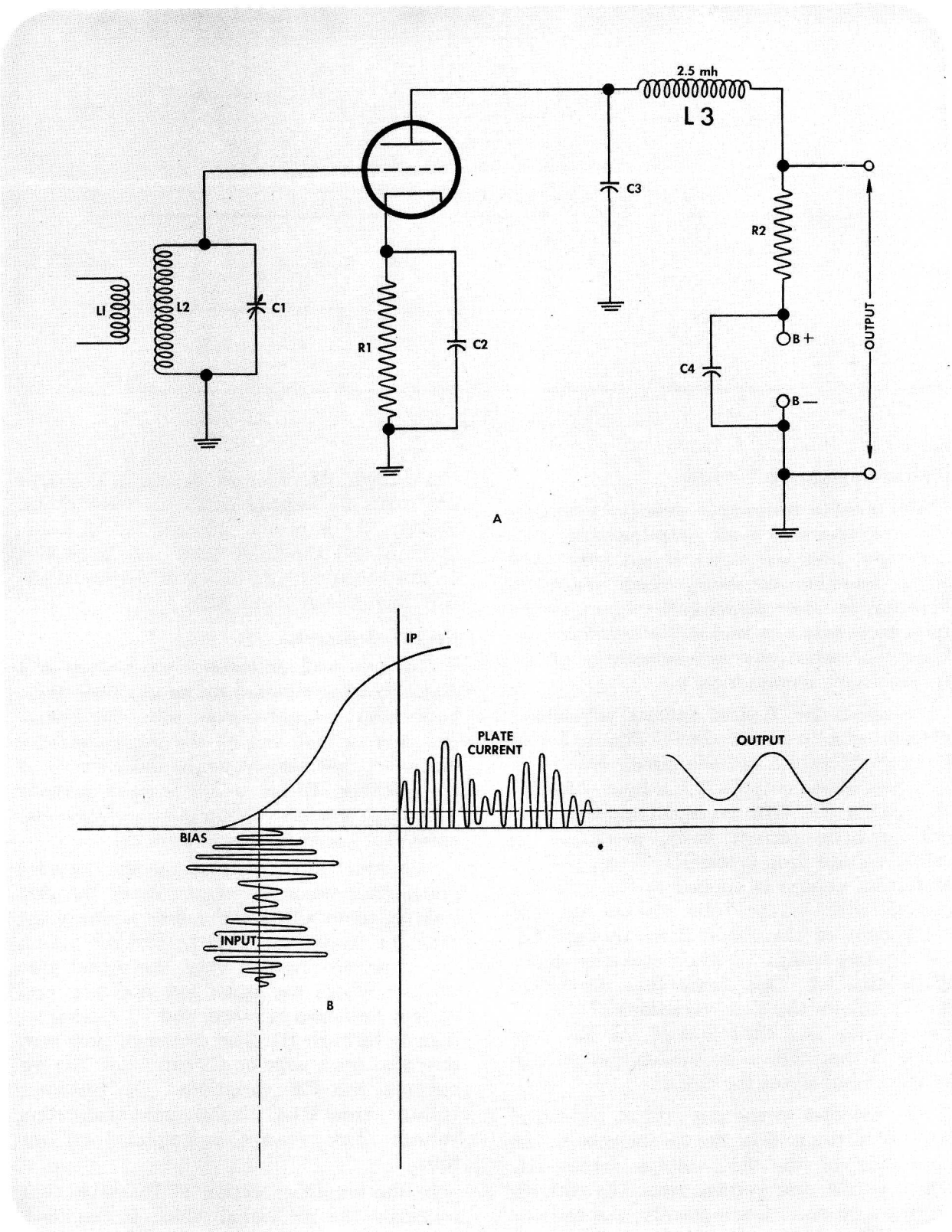

Plate Detector and Response Curve

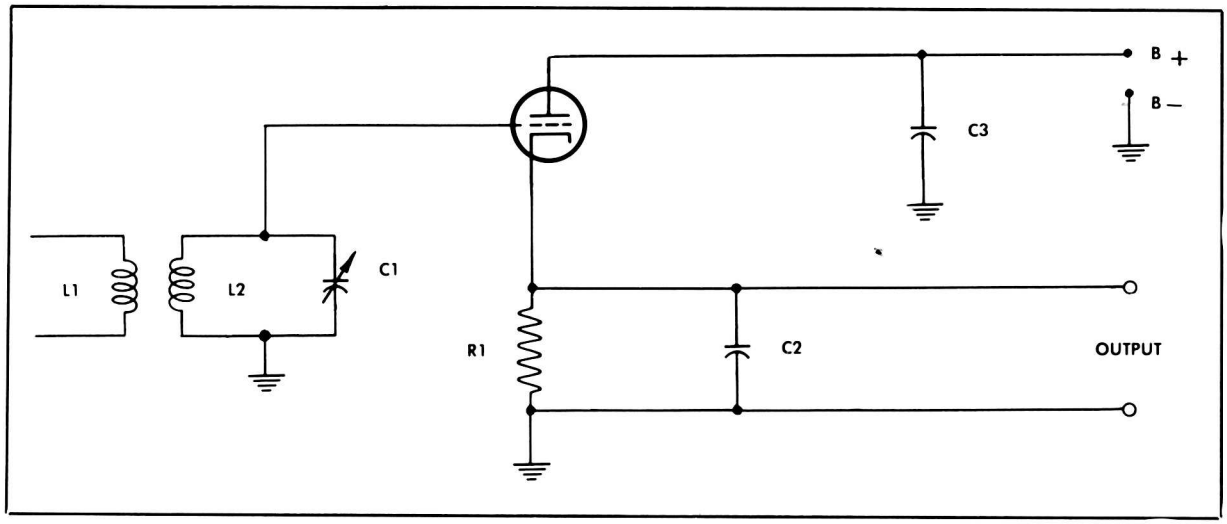

Infinite Impedance Detector

Infinite Impedance Detector

The infinite impedance detector combines the advantages of diode detection and plate detection. Like the diode, it has very good signal handling capability. Like the plate detector, it never draws grid current so the tube never acts as a load on the tuned circuit. Thus, the sensitivity and selectivity of the tuned circuit remain high.

Examine the typical infinite impedance detector circuit shown above. The action of R1 and C2 in the cathode circuit biases the tube just above cutoff. C2 is a bypass for RF but not for AF. With no signal applied to the grid, a little current flows, producing an initial voltage drop across R1. When positive excitation voltage is applied to the grid, the current through the tube due to the RF component of the signal flows through C2. On negative swings, C2 discharges only slightly through R1. This means that the charge on C2 follows the slow variations of the AF but not the fast variations of the RF. The result is that the audio modulation voltage is reproduced across the circuit.

Any increase in the strength of the signal applied to the grid causes an increase in the amplitude of the AF voltage across R1. Thus, as the grid voltage rises, the cathode voltage also rises. Consequently, the cathode voltage follows the grid voltage, and the grid can never become positive with respect to the cathode. In other words, the grid always offers infinite impedance to the flow of grid current. As a result, the grid never draws current, and the tube never acts as a load on the tuned circuit. The Q of the tuned circuit therefore remains high.

Grid Leak Detector

The grid leak detector is equivalent to a diode detector followed by an amplifier, with both circuits centered in one tube. The control grid and cathode act as the electrodes of a diode, yet they also act as the input circuit of an amplifier. Either a triode or a pentode tube may be used. The grid leak circuit diagram at A illustrates use of a triode.

The grid draws current on the positive grid signal. Since the reactance of the grid leak capacitor C2 to RF pulses is much less than the resistance of R1 to the RF pulses, the capacitor charges when the signal goes positive. When the signal goes negative, grid current decreases or stops, and C2 discharges slightly through R1. The discharge time is so slow that the charge on C2 can follow the AF but not the RF variations. The resultant voltage across R1-C2 is the audio modulation voltage. This voltage is amplified by the tube.

In the amplifier section of the tube, it is primarily the AF signal which is amplified. C3 bypasses the RF currents. The output is taken across the plate load resistor R2. When

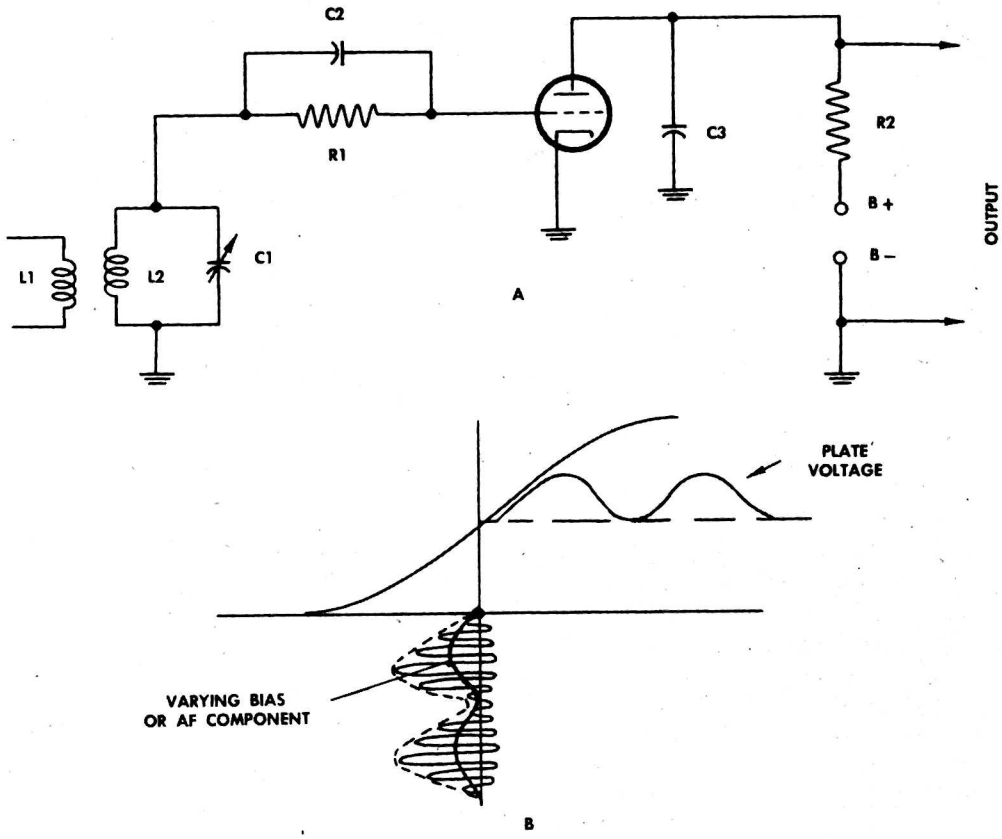

Grid Leak Detector and Response Curves

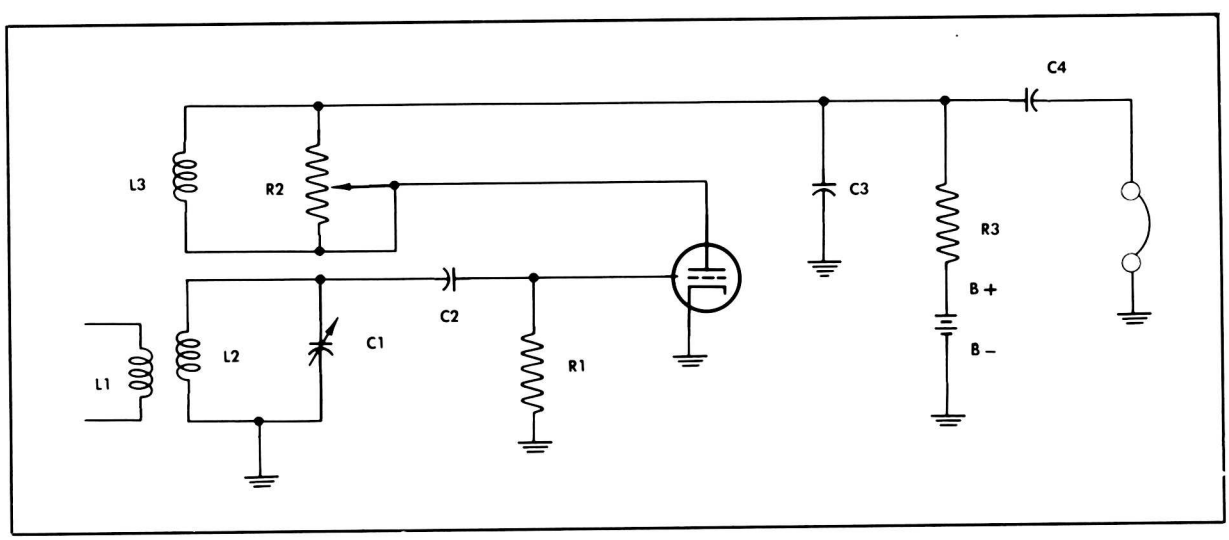

Regenerative Detector

a triode is used, an audio output transformer may serve as the plate load. When a pentode is used, the high plate resistance of the tube makes it necessary to use a resistor as the plate load.

Usually the grid leak circuit is designed to operate with strong grid signals. As shown at B, the detector operates on the linear portion of the curve. This detector has good sensitivity, since the tube amplifies the input signal. Selectivity is only fair, since the grid draws current to load the tuned circuit. Linearity is fair. Signal handling ability is very good.

Regenerative Detector

Regenerative detectors are special types of grid leak detectors. The plate circuit of the regenerative detector (page 19) contains a feedback coil (L3) that inductively couples energy back to the tuned circuit. This coil provides feedback to reinforce the incoming signal. Thus the tube not only amplifies the signal, but it also reinforces and increases the signal on the grid. This increased signal is also amplified — and again fed back to the grid. Thus the sensitivity of this circuit is far greater than the sensitivity of the detectors already studied. However, this circuit is difficult to handle. Circuit adjustments are very critical. If feedback voltage is too great, the stage responds as an oscillator, producing squeals in the sound output of the receiver, and producing interference in other receivers.

This tendency to oscillate can be used to advantage, however, in obtaining intelligence from CW transmissions. For CW reception, variable resistor R2 is adjusted so that the circuit starts to oscillate. The frequency of oscillation is slightly different from the signal frequency (to which L2-C1 is tuned) and this produces an audible beat frequency in the headset. This beat frequency can be varied by adjusting R2.

Superregenerative Detector

The operation of this type of receiver is somewhat like that of a regenerative detector receiving a CW signal. When the detector oscillates, the amplitude of oscillation is controlled by the amplitude of the RF input signals. The time that the detector oscillates is controlled by the quench oscillator, which operates at about 20 kc and applies an addi-

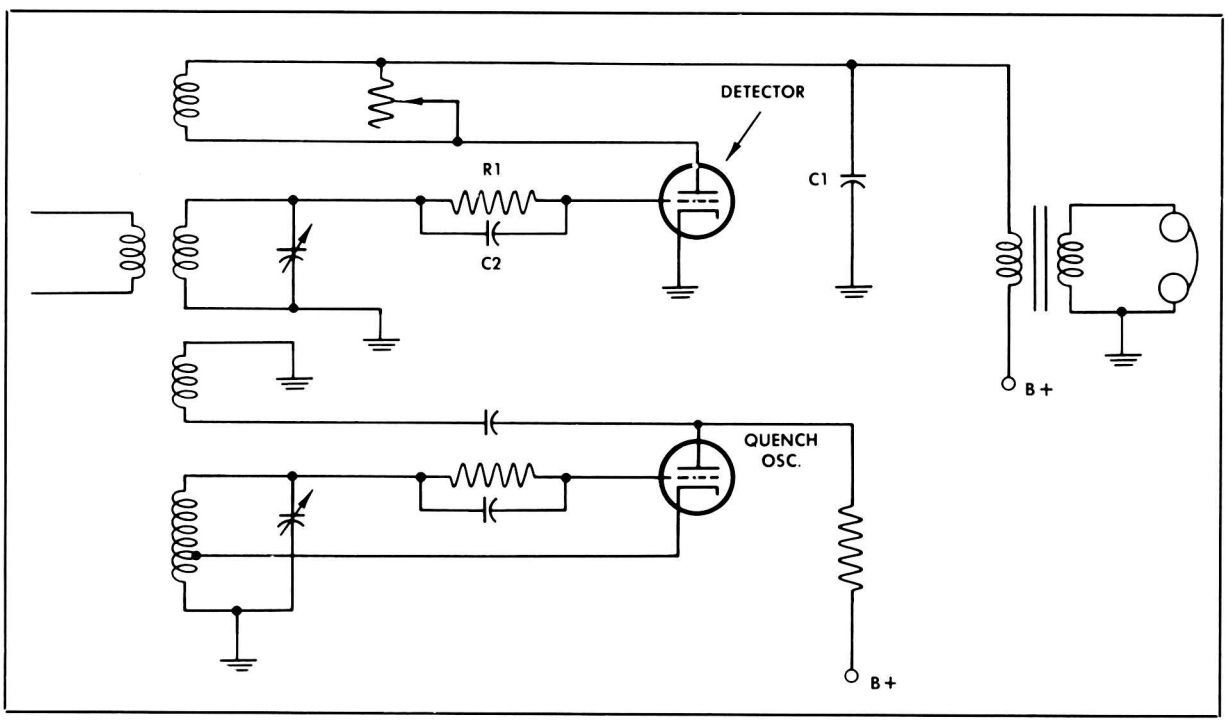

Superregenerative Detector

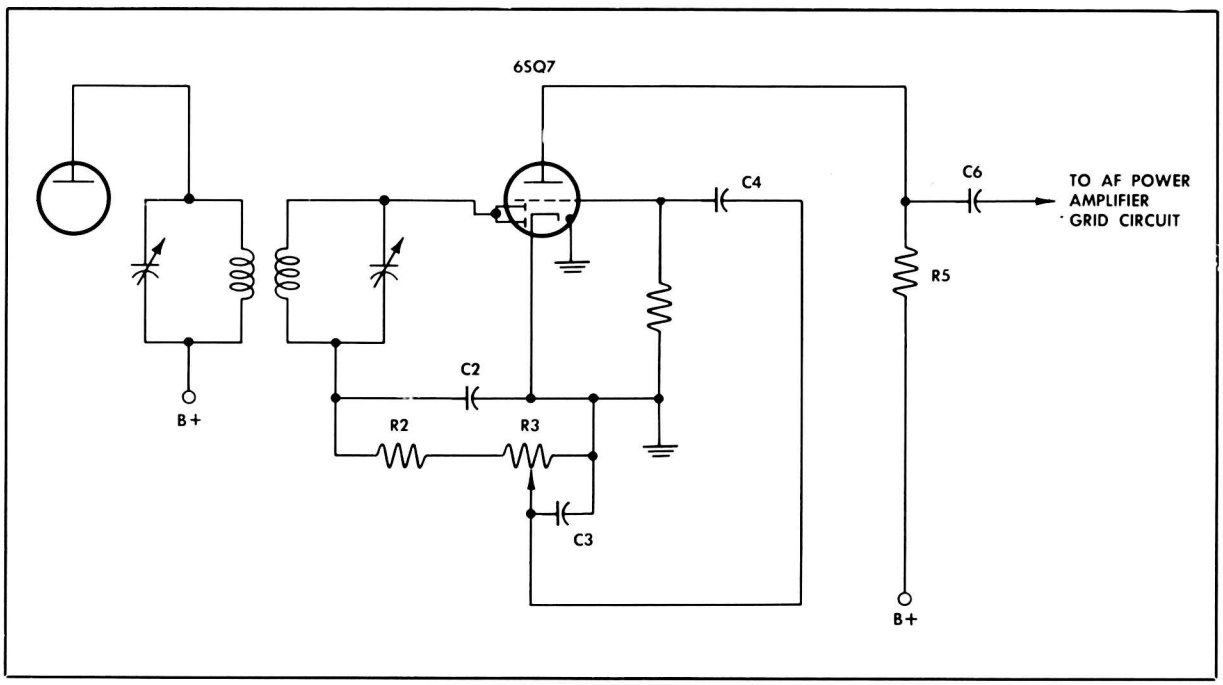

Detector-Amplifier

tional signal to the detector grid. When this signal is positive, the detector oscillates. When this signal is negative, the detector is cut off.

Each time the detector oscillates, a voltage pulse is developed in the plate circuit of the detector. The amplitude of this pulse is controlled by the amplitude of the incoming RF signal during the time of the pulse. Successive pulses, therefore, vary in amplitude according to the modulation envelope. These pulses are filtered by C1 so that only the audio voltage is applied to the primary of the output transformer.

The quench oscillator frequency must be above the audio range to prevent the quench frequency from being heard in the output. Also, the ratio of the RF input signal frequency to the quench frequency must be at least 100 to 1, to prevent a large amount of noise from developing. This means that the minimum RF frequency at which this type of receiver will operate satisfactorily is 2,000 kc. This type of circuit is especially adaptable to the VHF band, and is used in some VHF police equipment.

Superregenerative receivers are compact, light in weight, and low in cost. They consume little power, and have surprising gain for the number of tubes used. Superregenerative detectors have high sensitivity, but poor linearity. They are poor in selectivity because the grid current loads the tuned circuit. Their signal handling ability is very good.

Multielement Tube Detectors

One of the multielement special purpose tubes is the twin diode triode. Its use is shown in the detector-amplifier circuit diagram. This single tube serves simultaneously as a detector and audio amplifier. It contains a cathode, control grid, triode plate, and two diode plates. In this circuit, the diode plates are joined together and, with the cathode, they form the diode section of the tube. When the tuned circuit connected between the diode plates and cathode drives the diode plates positive with respect to the cathode, the diode section conducts.

R2 and R3 in series form the plate load resistor of the diode section. They are bypassed for RF by C2. R3 is a potentiometer which taps the AF voltage across part of the plate load and applies it to the grid of the triode amplifier section through coupling

capacitor C4. This amplifier operates as a high-mu voltage amplifier, supplying excitation voltage to the power amplifier grid. R5 is the plate load resistance for the triode section.

THE AUDIO SECTION

Two types of amplifier stages are used — voltage amplifiers and power amplifiers. When intelligence is to be reproduced by a headset, the audio section usually has one or two voltage amplifiers. When intelligence is to be reproduced by a speaker or a number of headsets in parallel, one voltage amplifier and one power amplifier are usually used.

The AF voltage amplifier is used to build up the signal enough to excite the grid of the power amplifier or to energize the headset. Either a triode or pentode tube can be used as the voltage amplifier. In most cases, a medium-mu tube is used, especially when preceding RF amplifier stages provide sufficient gain. Resistance-capacitance coupling of the voltage amplifier to the power amplifier is conventional. The voltage gain for a medium-mu triode operating at frequencies around 1000 cps runs from 10 to 70. The load resistance of the voltage amplifier should be several times the plate resistance.

A power amplifier must efficiently convert DC power to AC power. If a triode is used, it should have low internal resistance. Maximum power transfer takes place when the load impedance equals the internal resistance. However, in practice, the load impedance is kept smaller than the plate resistance to prevent distortion. Power amplifiers generally use tetrodes or pentodes. These have higher power efficiency than triodes. Some tetrodes deliver nearly twice the output of a triode, even when the grid voltage of the tetrode is one-fourth that of the triode. For tetrodes and pentodes, a load impedance of about one-tenth of the plate resistance is used.

Study the voltage and power amplifier shown in the circuit diagram. The generator in the grid circuit of V1, the voltage amplifier, represents the detector stage as a source of driving energy. The voltage output of V1 is capacitively coupled to V2, the power amplifier. The output of the power amplifier is transformer coupled to the speaker so that the high impedance of the power amplifier plate circuit can be matched to the low impedance of the speaker voice coil.

VOLUME CONTROL METHODS

Since the signals intercepted by an antenna may be of widely differing strengths, the receiver should be able to handle both weak and strong signals. It is advantageous to bring both the very weak signal and the very strong signal to approximately the same level of strength for the final reproduction of the intelligence. The process of matching signal strength to desired audio output involves the use of volume controls. Three methods are in common usage — manual control of audio

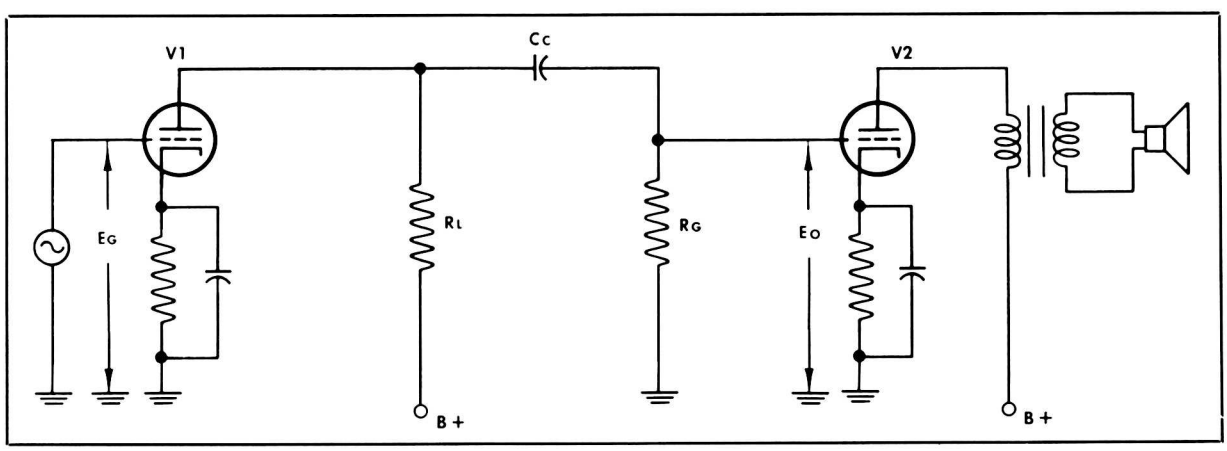

Audio Amplifier Section of TRF

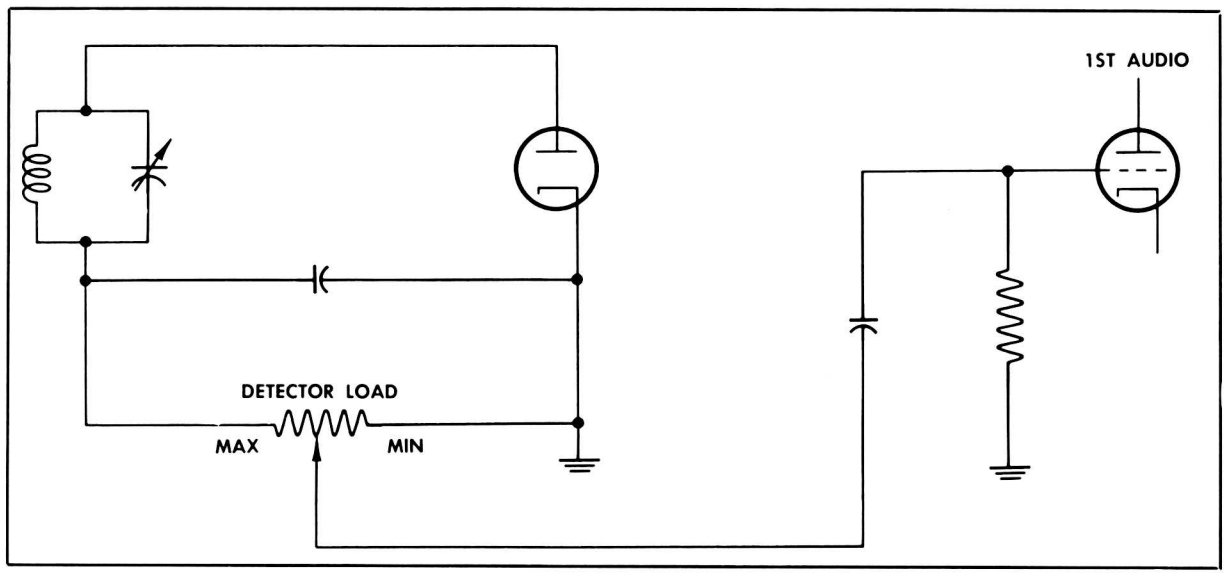

Manual Volume Control

signal, manual control of RF signal, and automatic control of RF signal.

Manual Audio Control

The control of signal strength in the AF section of a receiver is called manual volume control (MVC). As shown in the circuit diagram above, this type of control is accomplished by using a potentiometer as the detector load resistor. The strength of the audio signal applied to the grid of the first audio amplifier can be regulated by this means. Maximum and minimum points of volume are indicated on the circuit diagram.

For other kinds of coupling, the potentiometer arrangements are made as shown below. At A, the output is capacitively coupled to a potentiometer. The movable tap on the potentiometer is connected directly to the first audio amplifier grid. Here, the potentiometer is the grid resistor of the audio amfier. The tap selects a portion of the voltage across the resistor.

At B, the detector stage is transformer coupled to the AF amplifier. The potentiometer is across the secondary winding. The movable tap is connected directly to the grid. Here, the potentiometer is in series with the secondary of the transformer.. The tap selects a portion of the voltage across the potentiometer and applies it to the grid.

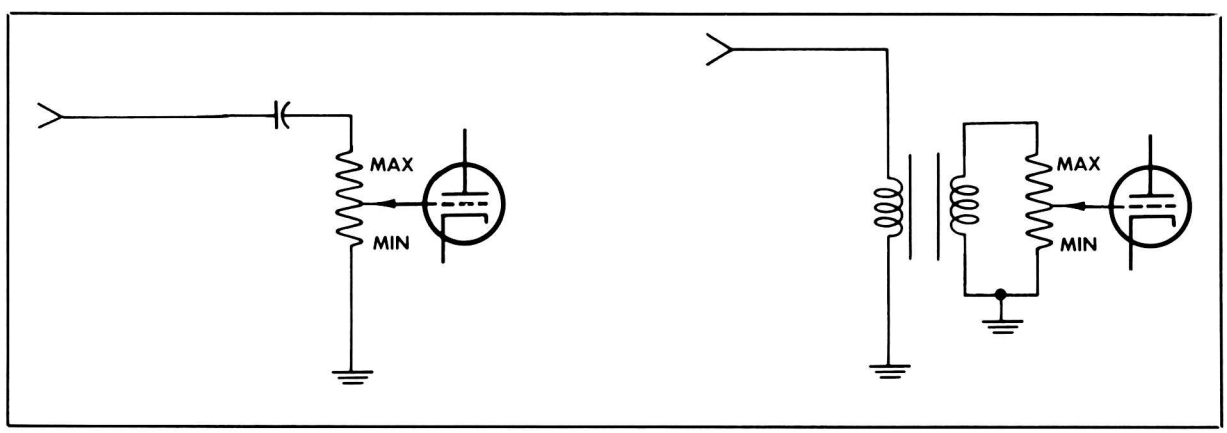

Variations of MVC

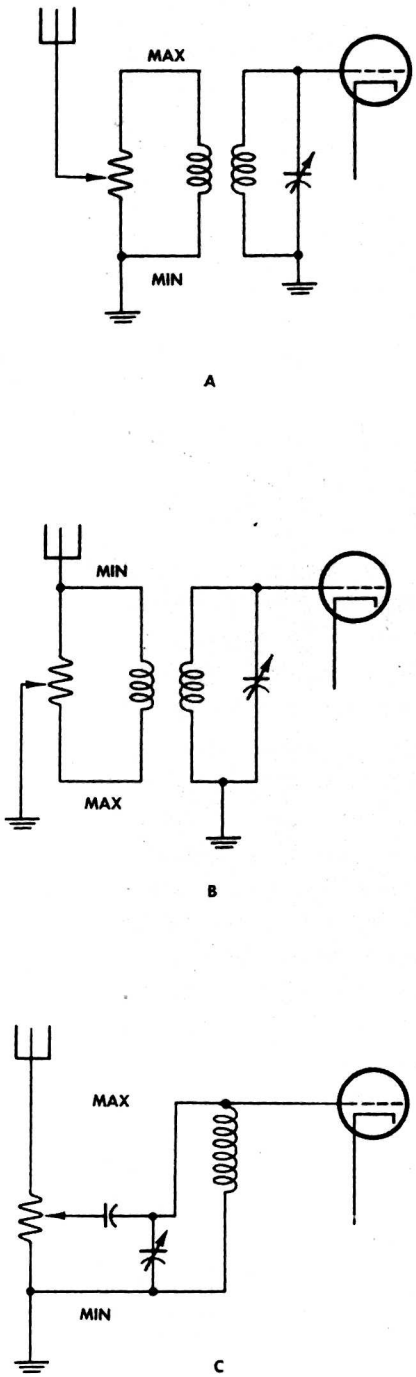

Antenna Volume Control Circuits

Manual RF Control

As shown in the illustration at the left, the RF signal amplitude can be controlled in the antenna circuit. At A, the antenna is connected to the movable tap of the potentiometer. At B the movable tap is connected to ground while the antenna is connected to one end of the potentiometer. At C, the movable tap is connected to the grid of the first RF amplifier while a tuned circuit is connected between the grid and ground. In each case, regulation of the potentiometer controls the amount of signal applied to the grid.

RF signal amplitude can also be controlled in the RF amplifier stages by regulating the amount of amplification of the stage. This is known as manual gain control (MGC). As shown on page 25, the variable resistor is in the cathode circuit of the RF amplifier. It is in series with a fixed resistor which provides a minimum amount of cathode bias. Adjusting the potentiometer changes the bias and thus the amount of amplification. This type of regulation is used with variable-mu pentode tubes, since these tubes permit considerable variation of bias without distortion. In actual use, the potentiometer would be in the cathode circuit of several stages. Thus, it would control the gain of several RF stages simultaneously.

Antenna volume control and manual gain control can be accomplished simultaneously by use of a single potentiometer, as shown below. The potentiometer controls both the resistance across the primary of the input transformer and the cathode resistance of the first amplifier.

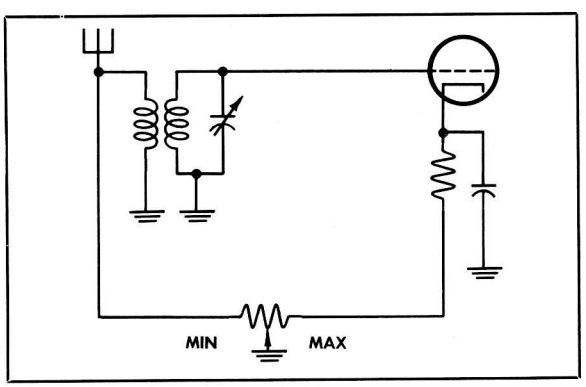

Dual Antenna and Gain Control

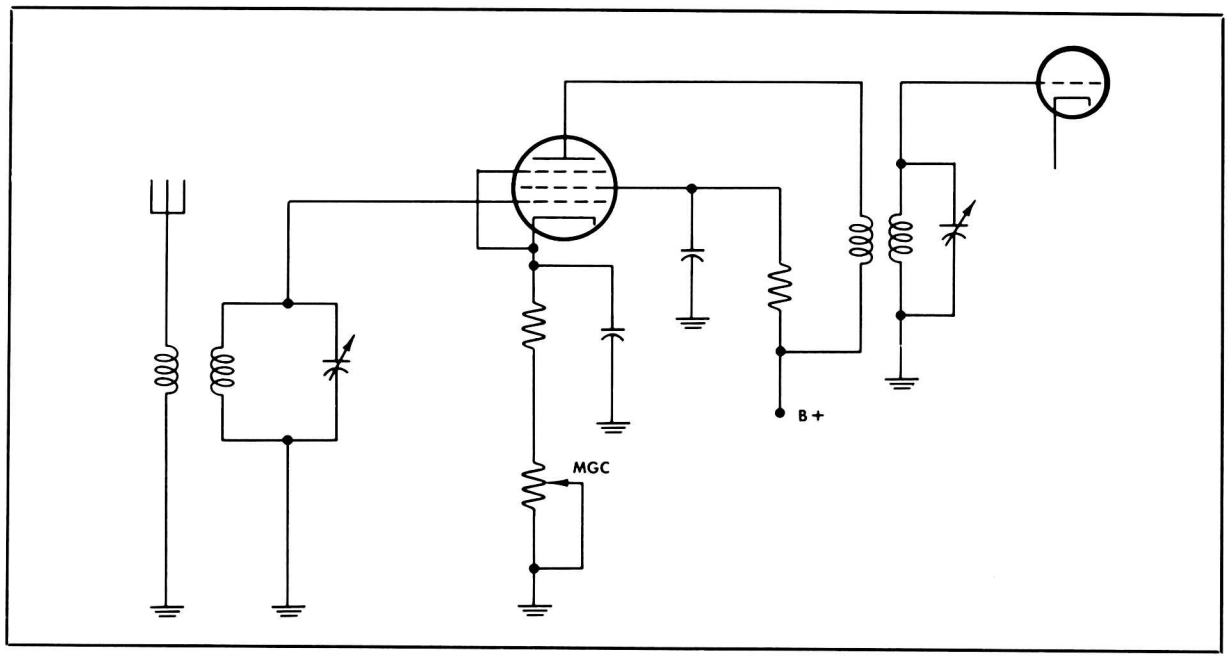

Manual Gain Control

Automatic Volume Control

A volume control permits the level of output to be kept approximately the same for both a weak signal and a strong one. However, fading causes such variations in signal strength that no single setting of the volume control gives uniform output. Automatic volume control (AVC) corrects this situation and permits uniform output for a signal of varying strength.

In general, AVC controls the gain in several amplifier stages preceding the detector. Such an arrangement is shown below. The parts

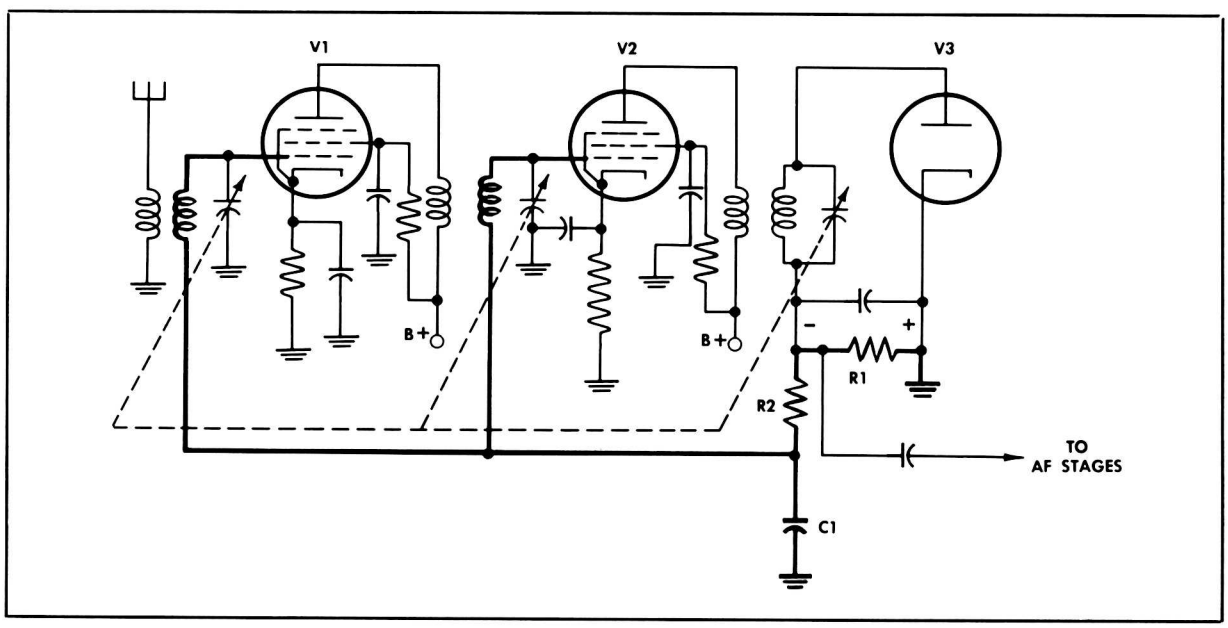

Basic AVC Circuit

of the circuit involved in AVC are drawn in heavy lines. When using AVC, these tubes are usually variable-mu tubes.

V1 and V2 are RF amplifiers. V3 is the detector. The AVC process starts with the detector and works back to the RF amplifiers. R1 is the load resistor of the detector. The voltage across R1 depends on the strength of the signal being detected by the diode. When the signal is strong, the voltage across R1 is large. Note that the voltage drop across R1 is negative in respect to ground. Note also that this negative voltage drop is applied through R2 to the grids of V1 and V2. This means a reduction in the gain of each amplifier stage. The amount of reduction depends on the size of the voltage drop across R1. If the signal is weak and the voltage across R1 is small, then the gain of the amplifier stages is reduced only a small amount. If the signal is strong and the voltage drop across R1 is large, then the reduction in gain is large. This means that AVC reduces the gain in both tubes. However, since the amount of reduction is proportional to signal strength, the output is kept fairly uniform. The general loss of gain caused by the use of AVC is small compared to the amount of gain provided by the amplifiers.

Of course, the voltage drop across R1 is DC, pulsating at an audio rate. To apply these audio variations to the RF amplifier grids would produce distortion. Therefore, the DC voltage fed back to the grids is filtered to remove the audio component by the filter made up of R2 and C1. The time constant of C1 and R2 is such that the AF pulses are filtered out, and a pure DC voltage is fed back to the amplifier grids.

TYPICAL TRF RECEIVER

You have now studied, circuit by circuit, all the parts of the TRF. You have studied various methods of detection used in the TRF, and in other receivers. You have studied various methods of volume control used in the TRF, and in other receivers. It is time now to bring the various circuits together to form one typical TRF circuit diagram. To help you understand the circuit diagram, the table on page 28 gives a description of each of the circuit components.

The antenna circuit includes a tunable parallel wavetrap for undesirable signal rejection. The antenna is inductively coupled to the input of the first RF amplifier.

There are three RF amplifier stages, followed by a detector stage. Four tuned RF circuits control the inputs to these stages. These tuned circuits are ganged—their variable capacitors, C2, C3, C4, and C5 can be adjusted by a single control. Capacitors C6, C7, C8, and C9 are trimmers They are separately adjustable and can be used for tracking the four tuned circuits. These stages, the three RF amplifiers and the detector, are transformer coupled.

The three RF amplifier stages use variable-mu pentode tubes. The detector stage provides diode detection by using a triode tube with plate and control grid connected for diode action.

The output of the detector is capacitively coupled to the audio amplifier, a pentode tube. The output of the audio amplifier is transformer coupled to the headset.

All the amplifiers use cathode bias. A single potentiometer (R4) forms part of the cathode resistance of the first two RF amplifiers. It also forms part of the antenna circuit. Adjustment of this potentiometer provides manual gain control when ganged switch SW2 is in the MGC position. In this position, one contact of the switch grounds the potentiometer so that it can be used. Another contact grounds the AVC circuit so that it can't feed voltage to the grids of the RF amplifiers. A third contact applies the entire voltage drop across the diode load resistor to the AF amplifier. This makes the adjustable part of the manual volume control inoperative.

When switch SW2 is in the MVC-AVC position, one contact grounds the top of potentiometer R4, removing it from the cathode circuit of the first two RF amplifiers, leaving all of R4 across the primary of T1. Another contact removes the ground connection which prevented AVC voltage from being fed to the amplifier grids. A third contact connects the variable arm of potentiometer R15 (the detector load resistor) to the input of the audio amplifier. Thus, the output of the

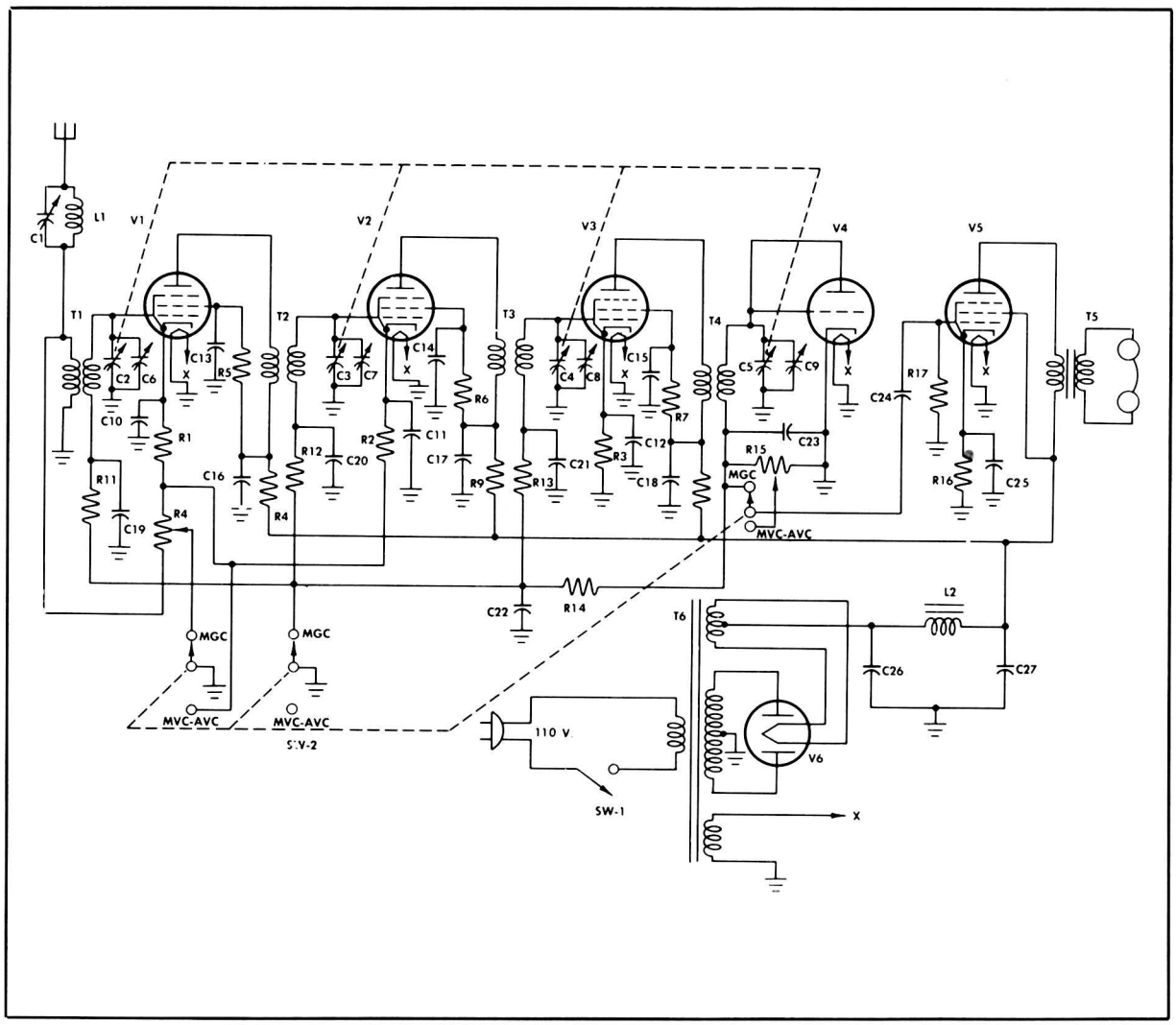

Typical TRF

detector can be regulated manually, and the automatic volume control circuit is in operation.

Altogether, then, three methods of volume control are used: manual gain control on one position of the switch, and both manual volume control and automatic volume control on the other.

The power supply uses a full wave high vacuum rectifier tube, with a capacitor input pi-type filter. This type of filter develops a high DC voltage output (about 0.9 of the peak AC voltage), but has poor voltage regulation. However, the load current taken by the receiver circuits is fairly constant. Thus, the power supply functions very efficiently. This is the type of power supply used in the majority of AC receivers.

TRF receivers have been widely replaced by superheterodyne receivers. The selectivity and response of the TRF are not uniform over the tuning range. Also, it is difficult to design TRF receivers for satisfactory operation at extremely high frequencies. However, the TRF continues to be useful, particularly in military communications, because it has one advantage over the superheterodyne—it does not use an oscillator in its circuit, while the superheterodyne does. Thus, the superheterodyne cannot be used where the enemy has direction finding equipment to detect a receiver's location.

TRF COMPONENTS

SECTION	REFERENCE NUMBER	FUNCTION	SIZE OF PART
RF AMPLIFIER			
	C1	CAPACITOR FOR WAVETRAP	
	C2, 3, 4, 5	4-GANG VARIABLE TUNING	35 - 365 MMF (broadcast band)
	C6, 7, 8, 9	TRIMMERS	
	C10, 11, 12	CATHODE BIAS BYPASS	.1 MFD
	C13, 14, 15	SCREEN GRID BYPASS	.05 MFD
	C16, 17, 18	PLATE DECOUPLING FILTER	.05 MFD
	C19, 20, 21	GRID DECOUPLING FILTER	.05 MFD
	C22	AVC FILTER	.05 MFD
	L1	COIL FOR WAVETRAP	
	R1, 2	MINIMUM CATHODE BIAS	400 OHMS
	R3	CATHODE BIAS	400 OHMS
	R4	MANUAL GAIN CONTROL	10 K
	R5, 6, 7	SCREEN VOLTAGE DROPPING	90 K
	R8, 9, 10	PLATE DECOUPLING FILTER	1.5 K
	R11, 12, 13	GRID DECOUPLING FILTER	100 K
	R14	AVC FILTER	1 MEG
	SW2	DETERMINE FORM OF VOLUME CONTROL	
	T1	ANTENNA TRANSFORMER	
	T2, 3, 4	INTERSTAGE COUPLING; TUNING	
	V1, V2, V3	RF AMPLIFICATION	6K7 OR 6SK7
DETECTOR			
	C23	RF FILTER	250 MMF
	C24	AF COUPLING	.02 MFD
	R15	LOAD RESISTOR; MANUAL VOLUME CONTROL	500 K
	V4	TRIODE CONNECTED AS A DIODE: DETECTOR	6J5
AF AMPLIFIER			
	C25	CATHODE BYPASS	25 MFD
	R16	CATHODE BIAS	200 OHMS
	R17	GRID RETURN	500 K
	T5	OUTPUT TRANSFORMER	
	V5	AUDIO AMPLIFIER	6F6
POWER SUPPLY			
	C26, 27	FILTER CAPACITORS	8 TO 16 MFD
	L2	AUDIO FILTER CHOKE	20 HENRIES
	SW1	ON/OFF	
	T6	POWER TRANSFORMER	
	V6	FULL WAVE RECTIFIER	5Y4-G

CHAPTER 3

SUPERHETERODYNE RECEIVER

The superheterodyne receiver is the type of receiver in most common use today. Almost all broadcast and communications receivers are now superheterodynes. Most receivers designed for high frequencies are superheterodynes.

This chapter discusses the basic principles of superheterodyne operation and the types of circuits used.

PRINCIPLES OF SUPERHETERODYNE OPERATION

The superheterodyne receiver takes advantage of two important facts of radio operation. First, amplification of a radio signal at a low frequency can be more successful than amplification at a high frequency. Second, amplification of a signal by fixed tuned circuits is more successful than amplification by variable tuned circuits.

The superheterodyne converts all input frequencies to a single, fixed, lower frequency which is amplified by fixed tuned circuits. This process distinguishes the superheterodyne from other receivers in performance, for it provides outstanding sensitivity and selectivity over the whole tuning range. The superheterodyne is distinguished from other receivers in construction, as shown on page 30.

Note the IF (intermediate frequency) amplifier stage. It is this stage which employs the fixed tuned circuits. The fixed frequency which it amplifies is called the intermediate frequency, because it is lower than any input frequency within the receiver's tuning range, but higher than audio frequencies. The receiver shown in the block diagram is a broadcast receiver with an IF of 455 kc. This frequency is substantially lower than the lower limit of the broadcast band which is 550 kc.

Note the local oscillator stage. The output frequency of this stage is combined with the output frequency of the RF amplifier stage to produce a new frequency — the intermediate frequency. This process is called heterodyning. The frequencies on the block diagram show the frequencies at which various stages operate when the receiver is tuned to receive a signal of 800 kc. Note that the oscillator frequency is given in the block diagram as 1255 kc, and the RF amplifier frequency as 800 kc. This means that the oscillator operates at a frequency 455 kc above the RF amplifier frequency.

The difference frequency, equal to the IF, appears in the output of the mixer. The oscillator frequency is heterodyned against the RF amplifier frequency in the mixer stage. The output of the mixer contains the oscillator frequency, the RF amplifier frequency, the sum of these two frequencies, and the difference between these two frequencies. The fixed tuned circuits of the IF amplifier are tuned to 455 kc. Therefore, they accept the difference frequency but reject the others.

The heterodyning process is illustrated by the waveforms shown in the block diagram. The RF modulated wave intercepted by the antenna is shown at A. At B, the waveform shows the same modulated carrier after it has been amplified by the RF amplifier stage. At C, the waveform shows the output of the local oscillator. It is unmodulated. Its amplitude is considerably higher than the amplitude of the waveform put out by the RF amplifier. At D, the waveform represents the amplified

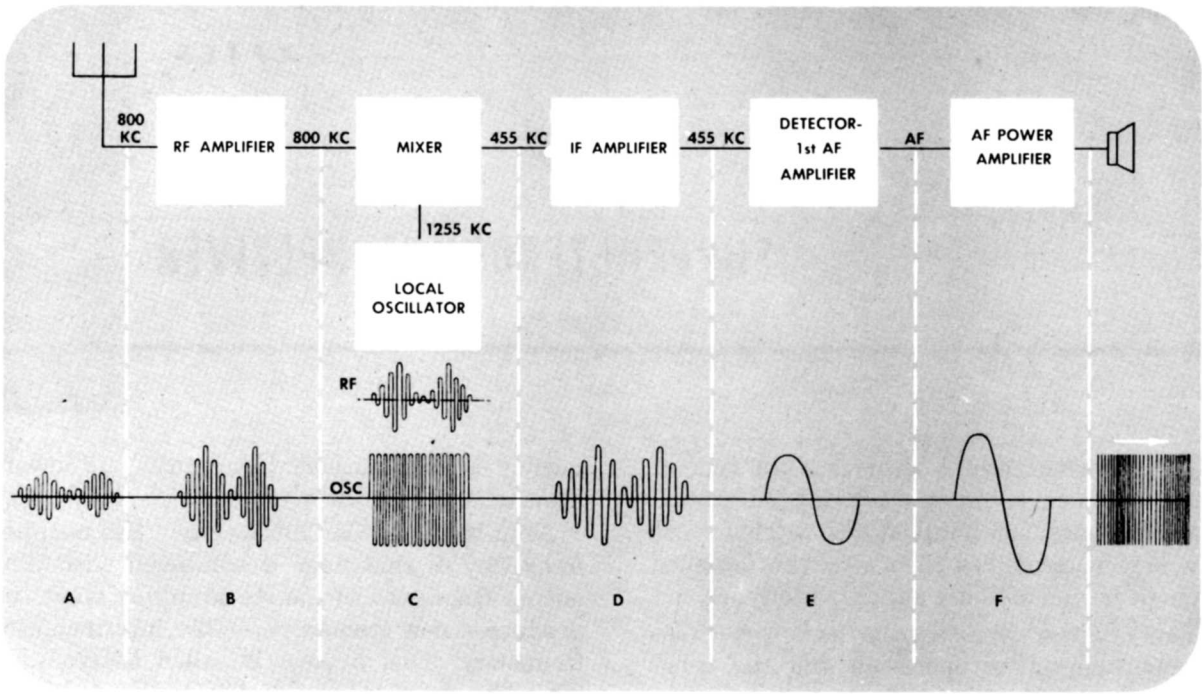

Typical Superheterodyne

difference frequency. Note that it bears the same modulation pattern as the RF carrier. At E, the waveform represents the detected audio frequency. At F, the waveform represents the amplified audio frequency.

Of course, the superheterodyne receiver is not confined to an input frequency of 800 kc. The RF amplifier tuned circuit is variable and can select any frequency in the broadcast band. The tuned circuit of the oscillator is also variable. It is ganged with the RF amplifier tuned circuit so that it is always 455 kc above the frequency to which the RF amplifier is tuned. Thus, the difference frequency between oscillator frequency and the RF input frequency is always 455 kc. This arrangement for keeping frequencies separated by a fixed amount is called *tracking*. It means that the frequency presented to the IF amplifier is always the same, no matter what the RF input frequency may be.

For low, broadcast, and medium frequencies, the oscillator usually tracks above the signal. For VHF and UHF, the oscillator usually tracks below the signal.

There is one major disadvantage to superheterodyne operation. If a local oscillator frequency of 1255 kc can mix with an input frequency of 800 kc to produce a difference frequency of 455 kc, this same local oscillator frequency of 1255 kc can also mix with an input frequency of 1710 kc to produce a difference frequency of 455 kc. Thus, the mixer section might present to the IF amplifier the signal from two different stations at the same time, both converted to the same IF. The IF amplifier would accept and amplify both at the same time. The demodulator would detect the signal of both at the same time. The intelligence of both would be present in the speaker at the same time. Such a mixture of signals would be confusing, if not unintelligible.

The second signal which might interfere with the desired signal is called the *image frequency*. Image frequencies can best be prevented by selective tuning of the RF amplifier section. Highly selective RF amplifier tuned circuits, when tuned 455 kc below the oscillator frequency, will reject a frequency 455 kc above the oscillator frequency. In other words, the RF stage tuned to a frequency of 800 kc rejects the image frequency of 1710 kc.

SUPERHETERODYNE CAPABILITIES

The superheterodyne receiver has more uniform selectivity and sensitivity over its tuning range than the TRF, because most of its gain is obtained in fixed-tuned circuits. These low frequency fixed-tuned amplifiers are more easily designed for high gain and selectivity. While the selectivity of the IF stages determines the overall adjacent channel selectivity of the superheterodyne receiver, an RF preselector having sufficient selectivity to reject image frequencies must be added. Even so, the superheterodyne receiver requires fewer sections of a ganged capacitor, thereby reducing the tracking problem. For these reasons the superheterodyne receiver has largely replaced the TRF.

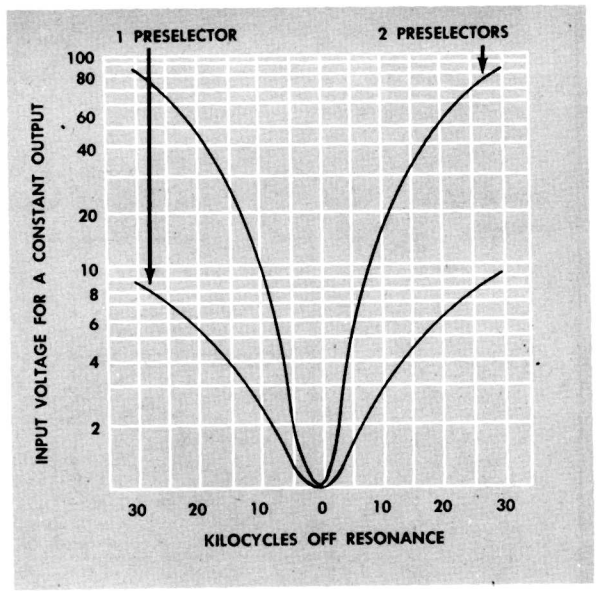

Superheterodyne Selectivity Graph

SUPERHETERODYNE PRESELECTOR

The RF amplifier section of the superheterodyne receiver is called the *preselector*. The RF circuits of the preselector are essentially the same as the RF circuits of the TRF receiver. In the superheterodyne, however, the selectivity of the RF amplifier stages is more important than the gain. It is the selectivity which prevents the appearance of image frequencies.

One, two, or three RF amplifier stages may be used for the preselector section. Two is the usual number in a communications receiver. The selectivity graph shows the amount of selectivity afforded by a preselector section containing one and two RF amplifier stages. The vertical axis shows the relative input voltage required for a constant output. The horizontal axis shows the number of kilocycles off resonance. Notice that, with one RF amplifier, a signal 30 kc off resonance must have about nine times the voltage of a signal at resonance, to give the same response. With two RF stages, a signal 30 kc off resonance must be about eighty times as strong as a signal at resonance, to give the same response.

FREQUENCY CONVERSION

The heterodyning process that takes place in the superheterodyne receiver is called *frequency conversion*. The actual stage in which this takes place is called the mixer or converter, depending upon the arrangement of the circuit. When one multielement tube is used as an oscillator and frequency converter, the stage is called a *converter*. When one tube is used as the oscillator and the oscillator and signal frequencies are applied to another tube, the latter tube is called a *mixer*.

Converters and mixers are also known as first detectors. The reason for this is that either a converter or a mixer tube must be nonlinear before its output will contain the difference or intermediate frequency. In other words, the tube must conduct more during the positive portions of the applied frequencies than during the negative portions—otherwise, the intermediate frequency would not be produced.

Local Oscillator

The local oscillator must meet exacting requirements in frequency coverage, frequency stability, constant output, and correct tracking. The local oscillator may use any of the fundamental oscillator circuits. The modified Hartley and the tuned grid are commonly used. Most VHF and UHF receivers use crystal-controlled local oscillators. To maintain frequency stability, the plate voltage of the oscillator is often regulated.

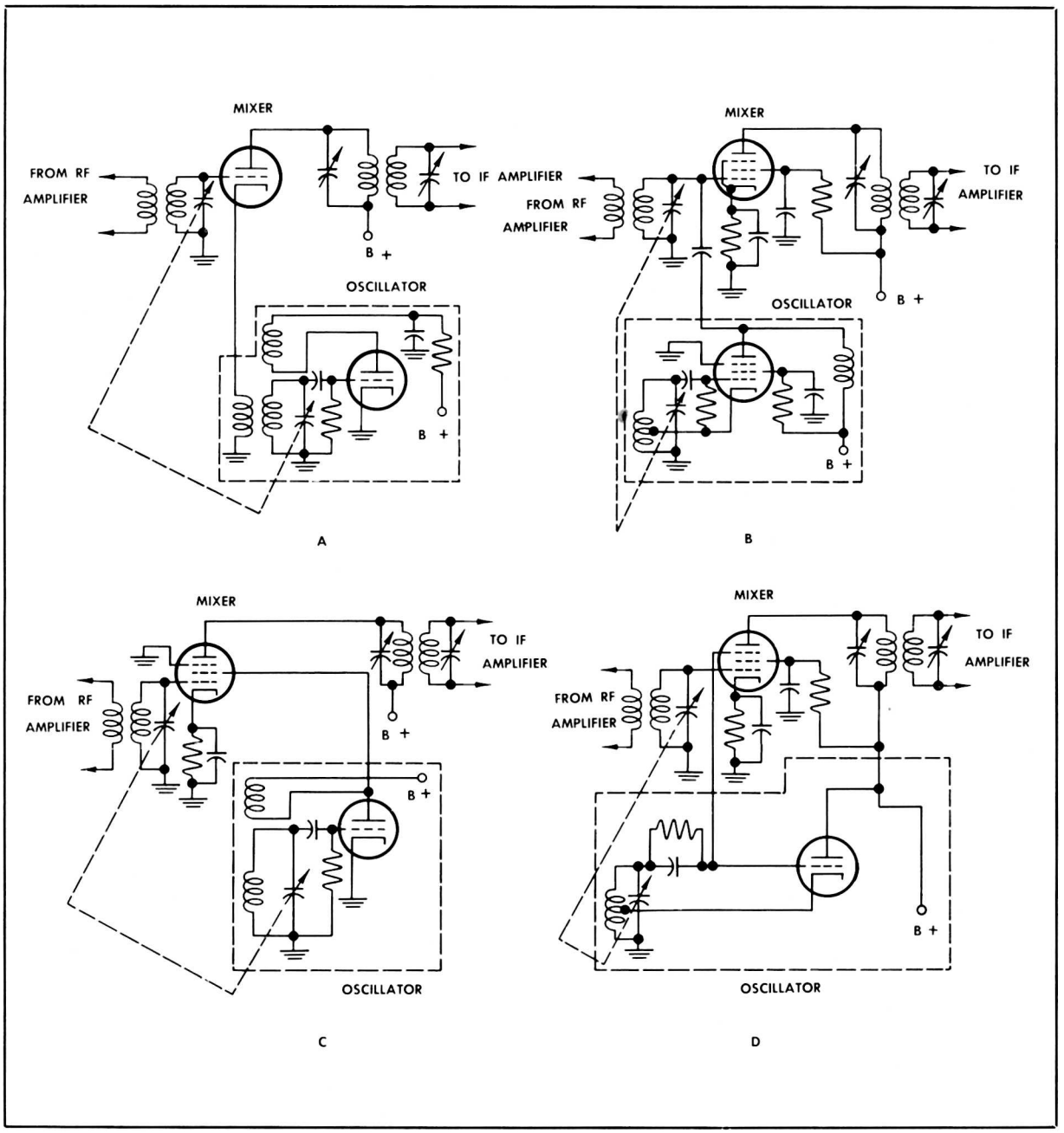

Methods of Mixer Injection

Another problem of stability is the effect that the other radio frequencies present have on the local oscillator. The oscillator tends to synchronize its oscillation with the other radio frequencies. The stronger these other RF signals are and the closer their frequency is to the oscillator frequency, the greater is the tendency for the oscillator to synchronize with these RF signals. A change in oscillator frequency caused by these RF signals is called *oscillator pulling*. Oscillator pulling may be reduced by isolating the oscillator as completely as possible from the other radio frequencies. This isolation is accomplished not only by proper shielding of oscillator components, but also by using appropriate means

for coupling the oscillator signal to the 1st detector. Oscillator voltage may be introduced into the 1st detector by inductive, capacitive, or electron coupling. It may be injected at the cathode, control grid, screen grid, or suppressor grid. Other types of injection make use of pentagrid tubes, discussed later in this chapter. These special purpose tubes are designed to isolate the oscillator circuit more effectively from the RF signal frequencies. For that reason they are helpful in reducing oscillator pulling.

Mixer

Notice the various mixers and various methods of injection shown in the illustration on page 32. Both pentodes and triodes can be used as mixer tubes.

At A, the output of a tuned grid oscillator is inductively coupled to the cathode circuit of the mixer. At B, a modified electron coupled Hartley oscillator is capacitively coupled to the control grid of the mixer. The oscillator uses a pentode instead of a triode because with the pentode there is less likelihood of pulling. At C, a tuned grid oscillator is conductively coupled to the screen grid of the mixer. At D, the output of the oscillator is taken from the oscillator control grid and connected directly to the suppressor grid of the mixer.

An advantage of suppressor grid injection is that the screen grid acts as a shield between the oscillator signal and the RF input signal (applied to the mixer control grid). This reduces pulling. However, with suppressor grid injection, the suppressor grid of the mixer is at the potential of the oscillator control grid. This puts negative voltage on the suppressor grid and lowers the gain of the mixer tube.

Pentagrid Mixer

A multielement tube called the pentagrid may be used as a mixer or as a converter. The five grids of the pentagrid tube are shown in the pentagrid mixer diagram below. Counting up, the first and third grids are the first and second control grids. The second and fourth grids, joined within the tube, are the inner and outer screen grids. The fifth grid, joined to the cathode within the tube, is the suppressor grid. The oscillator voltage is injected at the second

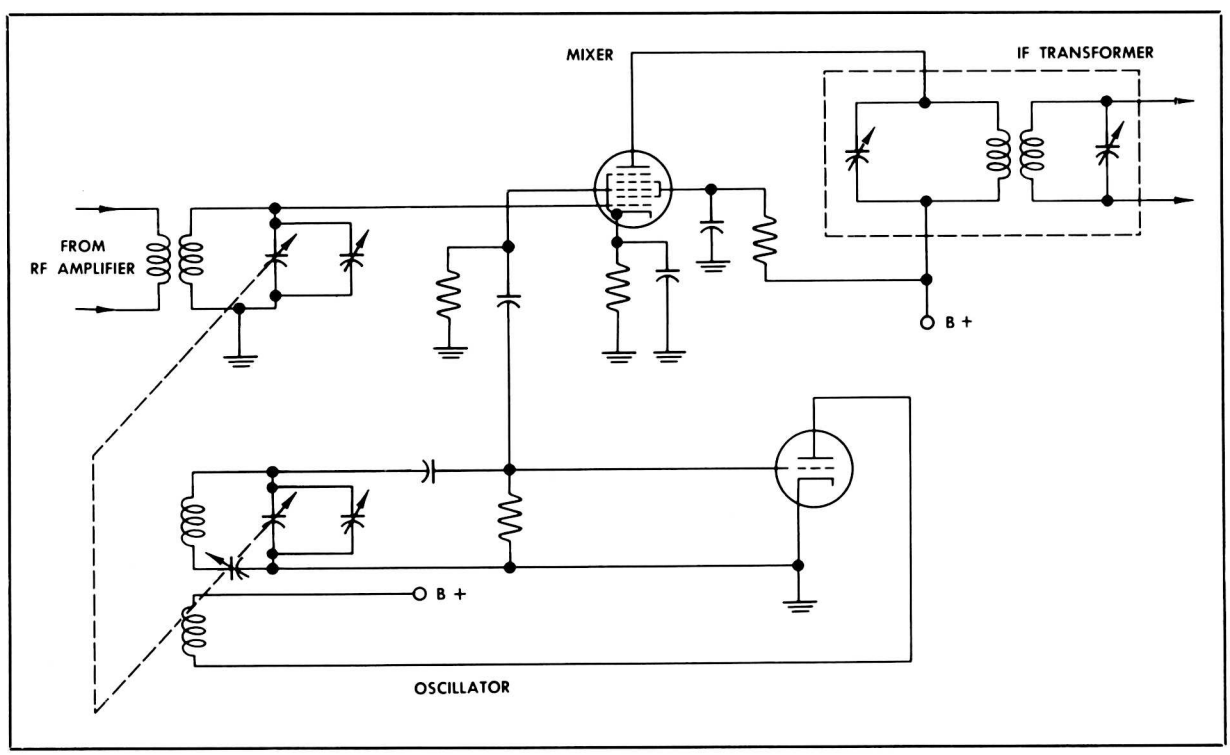

Typical Pentagrid Mixer

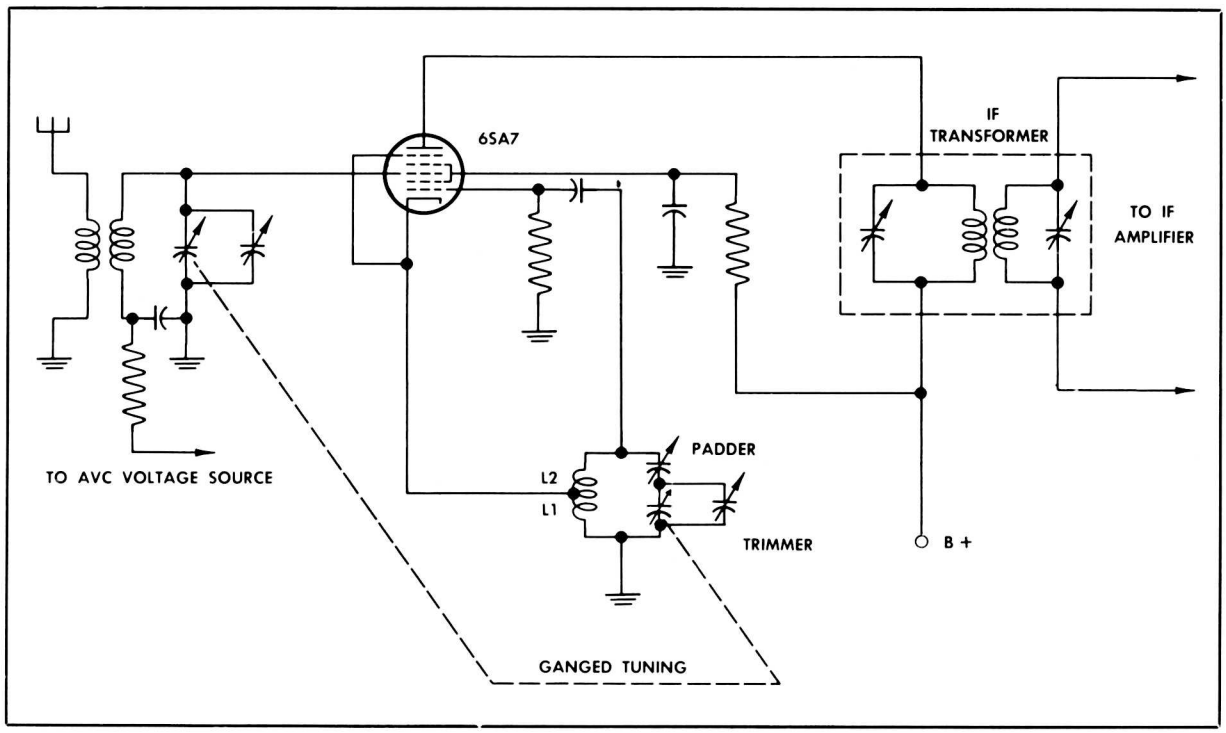

Pentagrid Converter

control grid, which is isolated from the first control grid and from the plate by screens. Thus, pulling on the oscillator is kept to a minimum. The RF signal voltage is introduced at the first control grid. Both control grids affect the flow of current from cathode to plate so that the signals of both grids are reproduced in the mixer output.

Pentagrid Converter

For low frequencies, where electrode interaction is relatively less important, the pentagrid can be used as a converter. In this use, it combines mixer and oscillator functions in a single tube, as shown in the diagram above. The oscillator section of the tube is composed of cathode, first control grid, and the combined screen grids (as the anode). Feedback to maintain oscillation is provided by the autotransformer action of tapped coil L1-L2. Current flowing to the cathode through L1 induces the feedback in L2. The oscillator voltage appearing on the first control grid affects the flow of current through the tube. The RF signal voltage is applied to the second control grid.

Conversion Gain

The efficiency of a conversion stage is calculated in terms of the ratio of IF output in the plate circuit of the mixer to the RF signal voltage input on the grid of the mixer. The conversion gain is usually about 0.3 of the normal gain of the tube when used as an IF amplifier.

Oscillator-Mixer Tracking

Notice that in all the frequency conversion circuit diagrams shown before the variable capacitor of the oscillator tuned circuit is ganged with a variable capacitor of an RF tuned circuit. This makes the oscillator tuned circuit track with the RF tuned circuit. The difference frequency is the IF. In addition to the ganged variable capacitors, the pentagrid converter circuit has small variable *padder* and *trimmer* capacitors. These can be adjusted to assure that the ganged circuits maintain the correct difference frequency throughout the tuning range. The trimmer, a parallel capacitor, has its greatest effect at the high end of the band. The padder, a series capacitor, has its greatest effect at the low frequency end of the band.

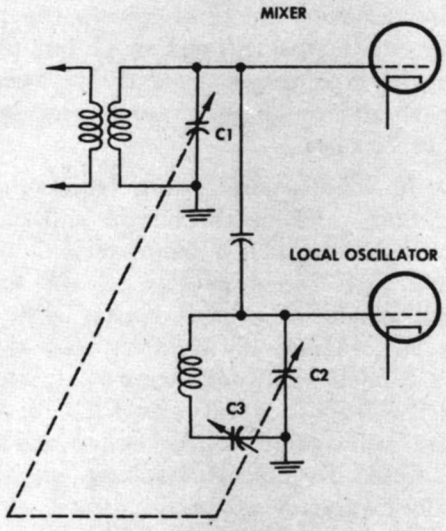

COMPONENT	COMPONENT SIZE	CAPACITY RATIO	FREQUENCY RATIO
C1	40-360 MMF	1:9	1:3
C2	40-360 MMF	1:9	
C3	500 MMF (variable)		
C2&C3	EFFECTIVE VALUE 37-210 MMF	ABOUT 1:5.6	ABOUT 1:2.36

Padder in Oscillator Tracking

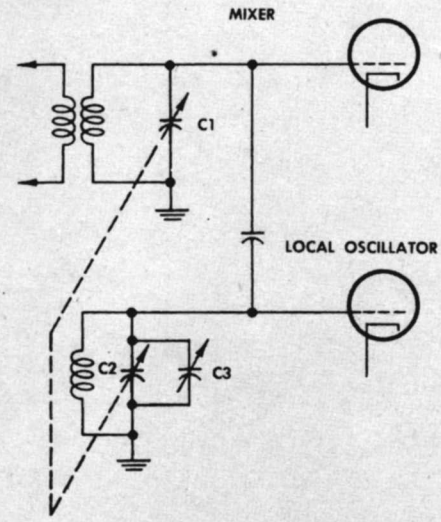

COMPONENT	COMPONENT SIZE	CAPACITY RATIO	FREQUENCY RATIO
C1	40-360 MMF	1:9	1:3
C2	40-360 MMF	1:9	
C3	30 MMF		
C2&C3	EFFECTIVE VALUE 70-390 MMF	ABOUT 1:5.6	ABOUT 1:2.36

Trimmer in Oscillator Tracking

You can see how the padder capacitor is important from the above circuit diagram and the accompanying chart. C1 and C2 are the ganged capacitors. Each has the same range of capacitance (40-360 mmf). However, each does not tune across the same range of frequencies. The oscillator circuit tracks higher than the RF circuit by a frequency difference equal to the IF. Therefore, if the frequency coverage of the receiver is 1 to 3 mc and the IF is 465 kc, then the oscillator covers from 1.465 mc to 3.465 mc. The tuning ratio of the RF circuit, low to high frequency, is 1:3. The tuning ratio of the oscillator is 1:2.36. The capacity ratio of both ganged capacitors is the same—1:9.

Since frequency is inversely proportional to the square root of the capacitance $f = \left(\frac{1}{2\pi\sqrt{LC}}\right)$, there is a match between a tuning ratio of 1:3 and a capacity ratio of 1:9 for capacitor C1. However, for capacitor C2, the tuning ratio of 1:2.36 does not match the capacity ratio of 1:9. Therefore C3 is added as a padder. The addition of capacitor C3, 500 mmf (variable), makes the range of C2 and C3 together vary between 37-210 mmf. This is a capacity ratio of 1:5.6. The combination is a good match for the tuning ratio of the oscillator of 1:2.36.

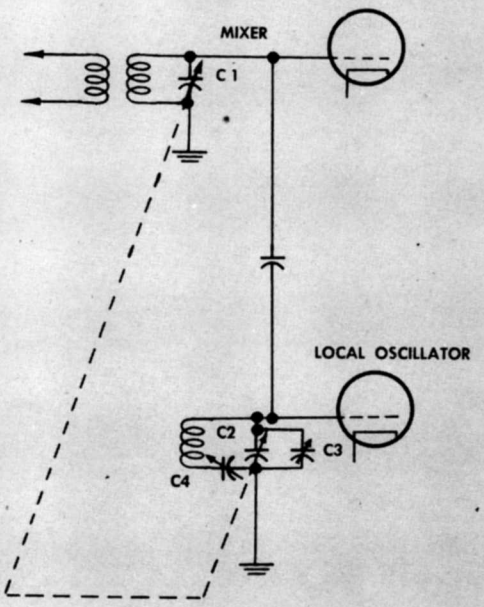

COMPONENT	COMPONENT SIZE	CAPACITY RATIO	FREQUENCY RATIO
C1	40-360 MMF	1:9	1:3
C2	40-360 MMF	1:9	
C3	3 MMF (variable)		
C4	500 MMF (variable)		
C2, C3, C4	EFFECTIVE VALUE 40-210 MMF	ABOUT 1:5.2	ABOUT 1:2.3

Padder and Trimmer in Oscillator Tracking

Note that adding the padder affects the high frequency end of the band (the low capacity end) very little. It merely changes the capacity from 40 mmf to 37 mmf. At the low frequency (high capacity) end, however, it affects the capacity considerably. It changes the capacity from 360 mmf to 210 mmf.

Now examine the circuit diagram and chart showing the use of a trimmer. C1 and C2 are the same capacitors shown in the padder circuit. C3 is the trimmer in parallel with C2. Its value is 30 mmf. The parallel combination of C2 and C3 has the effective range of 70-390 mmf. Thus the capacity ratio is 1:5.6, which matches the frequency ratio of the oscillator tank circuit of 1:2.36. Note that, proportionately, the trimmer capacitor affects the low frequency (high capacity) end much less than it affects the high frequency end. It changes the high frequency (low capacity) end from 40 mmf to 70 mmf.

To see how both padder and trimmer are used together, examine the circuit and chart at the left. Adding C3, a trimmer of 3 mmf (variable), and C4, a padder of 500 mmf (variable), produces a combination with an effective range from 40 mmf to 210 mmf. This is a capacity ratio of about 1:5.2 which matches the frequency ratio of 1:2.3 for the oscillator tuned circuit. Trimmers and padders are adjustable to permit tracking at both ends of the frequency range.

IF AMPLIFIER

An IF amplifier is basically an RF amplifier with a fixed tuned input and output. The tuned circuits act as bandpass filters, accepting the IF but rejecting other frequencies. Since they are fixed tuned, the tuned circuits have constant Q. With variable tuned circuits, like those in the TRF, Q varies with frequency. Response may be too sharp at one end of the frequency band and too broad at the other. In a superheterodyne, the response is more uniform because the IF circuits are fixed tuned. In addition, these fixed tuned circuits provide high selectivity and sensitivity.

Most IF transformers are double tuned with both a tuned primary and a tuned secondary. When less selectivity is desired, the primary is untuned. For greater selectivity, a third tuned circuit is sometimes inserted between primary and secondary.

The IF transformers used in any particular set may all be identical or they may vary from stage to stage depending on the design of the set. In one stage, for example, a higher or lower L C ratio may be required in order to match impedances. Coils are shielded to prevent stray coupling.

The tuned circuits are fixed tuned by screwdriver adjustment. The adjustable component

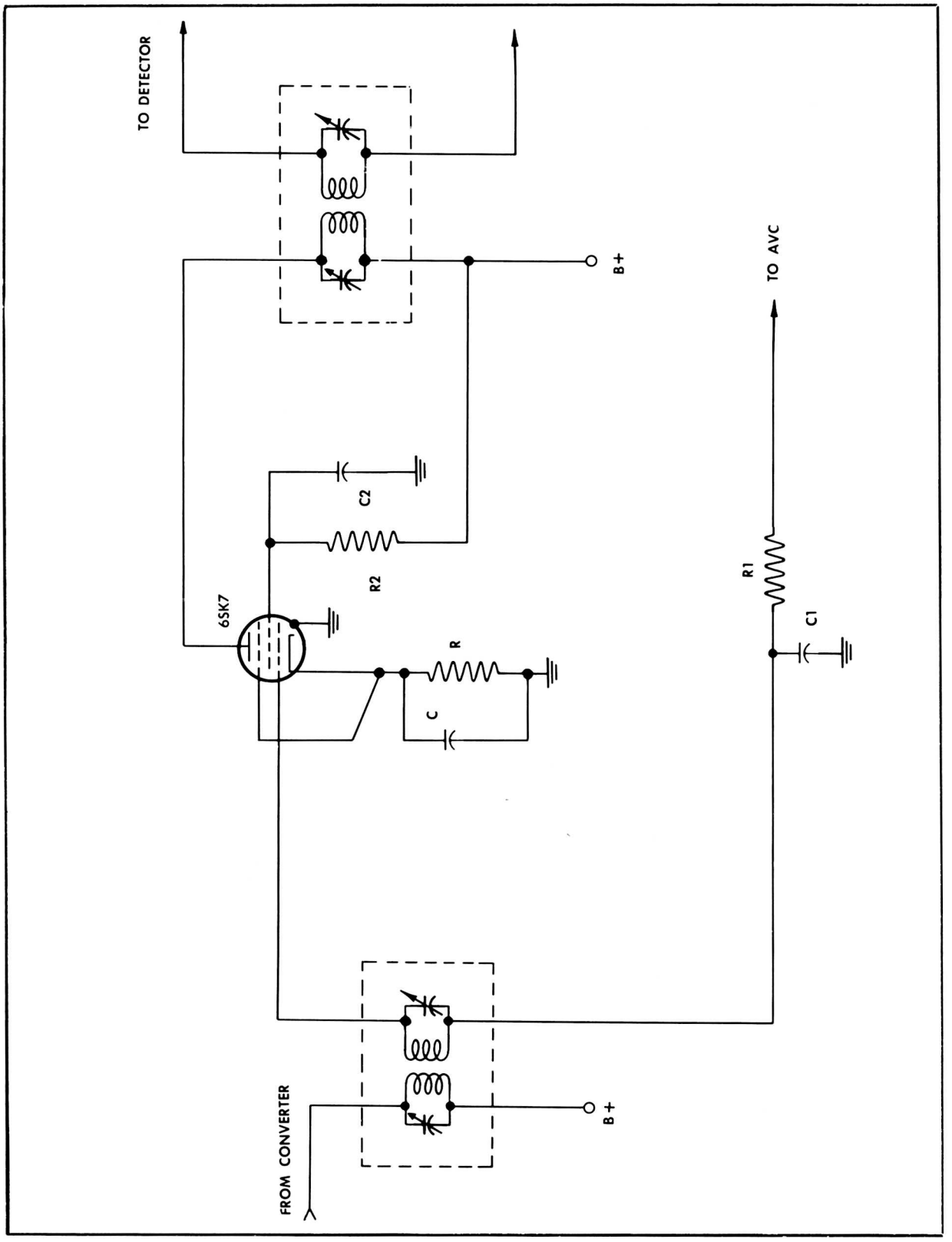

IF Amplifier Stage

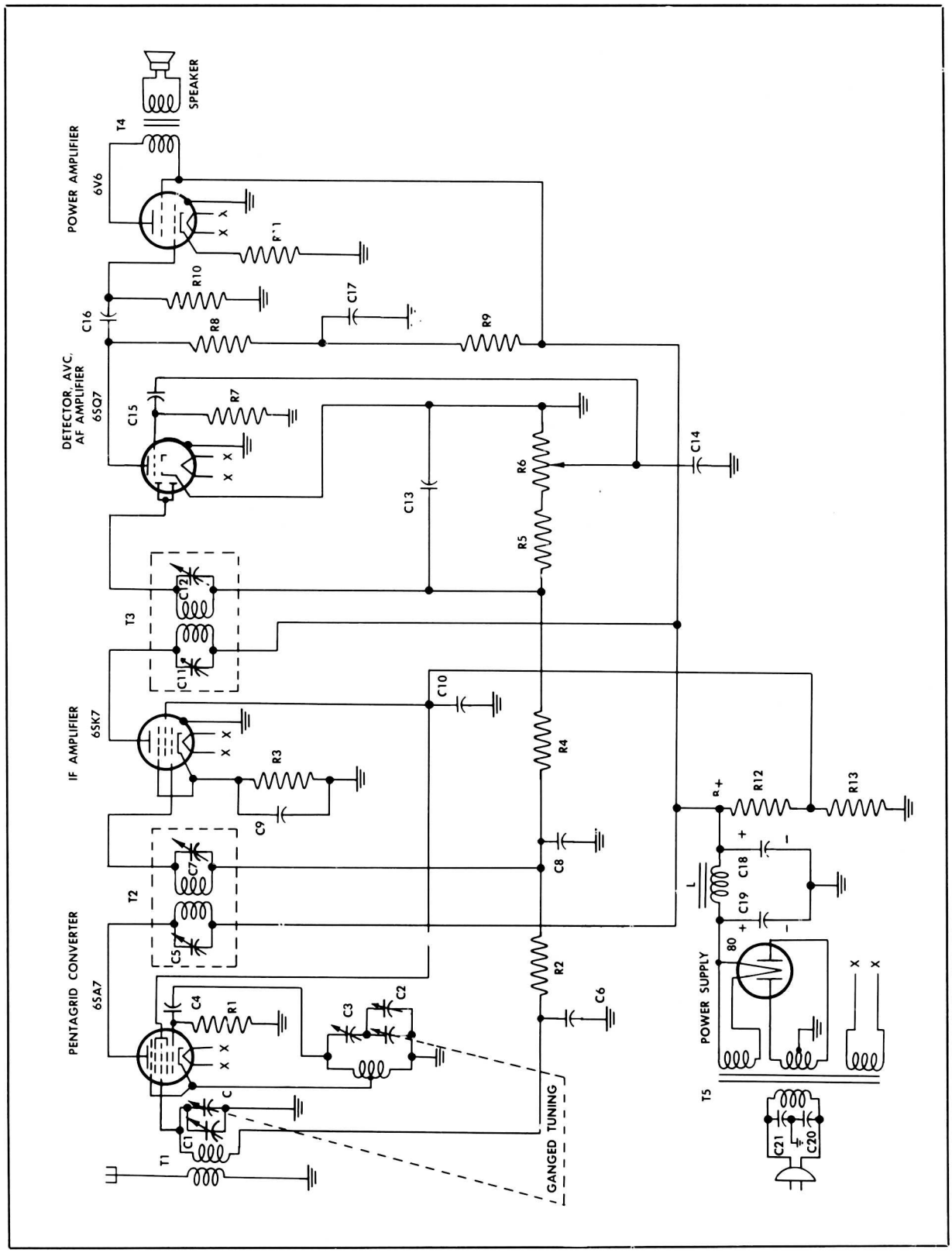

Typical Superheterodyne Receiver

may be a capacitor or a coil. Most receivers designed for military use have an adjustable core in the coil. This type of tuning is called permeability tuning. With this type of tuning, the components are more compact, and there are no open capacitor plates to vibrate, corrode, or gather moisture.

The amplifier tube is usually a variable-mu pentode. It is necessary that it be variable-mu to provide for AVC action.

Study the circuit diagram showing a typical IF amplifier stage. A constant DC cathode bias is developed across R and C. C bypasses the AC component of the current. R2 is a dropping resistor for the screen voltage. Both screen and suppressor are grounded for RF. The screen is grounded through C2, and the suppressor is grounded through C of the cathode circuit. Thus, both grids act as a shield between plate and control grid. R1 and C1 form a filter circuit to smooth out the AVC voltage so that audio modulation is not fed to the control grid along with the AVC.

The number of such stages used in a superheterodyne receiver depends on operating frequency and on the amount of gain desired. At higher frequencies, sensitivity and selectivity decrease and more stages are required. Receivers for the UHF and VHF ranges may have many IF stages.

ANALYSIS OF THE SUPERHETERODYNE

To get an overall view of a typical superheterodyne receiver, examine the complete schematic diagram on page 38. Two special purpose tubes are used. The pentagrid converter functions as local oscillator and mixer. The variable tuned circuits are ganged for oscillator tracking. Trimmer capacitors C1 and C2 and padder capacitor C3 are included to help in tracking. They are screwdriver adjustable. R1 provides about 3 volts grid leak bias for the local oscillator. IF transformer T2 selects the IF frequency and applies it to the grid of the IF amplifier.

The second special purpose tube, a 6SQ7, serves as a detector, an AF voltage amplifier, and an AVC rectifier.

The detector filter is formed by load resistors R5 and R6 and RF bypass capacitors C13 and C14. C15 and R7 make up the RC circuit that supplies the audio voltage to the grid of the first AF amplifier.

The volume control system includes MVC and AVC. MVC is made possible by potentiometer R6.

Filters formed by C6-R2 and C8-R4 eliminate modulation from the AVC voltage fed back to the grids of the converter and IF amplifier.

The power supply uses a full wave rectifier tube, with a capacitor input filter composed of L, C19, and C18, an arrangement used in most AC operated receivers. R12 and R13 form a voltage divider and bleeder circuit. Screen voltages for the converter and IF amplifier are taken from this divider. Capacitor C10 keeps the screens of both tubes at RF ground potential. Note the plate and screen voltages applied to the power amplifier. B+ is applied directly to the screen but has to go through transformer T4 to reach the plate. Because of the voltage drop across the plate transformer, the screen voltage is slightly higher than the plate voltage.

The AF output of the 1st AF amplifier is capacitively coupled to the power amplifier. The value of the coupling capacitor C16 and resistor R10 are such that they pass the lowest desired audio frequency. R11 provides bias for the power amplifier. Note that R11 is not bypassed by a capacitor. Thus there is degenerative feedback, providing greater fidelity.

PARTS LIST, TYPICAL SUPERHETERODYNE RECEIVER

REFERENCE NUMBER	CAPACITORS VALUE (mfd unless otherwise stated)	DESCRIPTION
C1	10 to 30 MMF	ANTENNA TRIMMER
C2	10 to 30 MMF	OSCILLATOR TRIMMER
C3	500 (max) MMF	OSCILLATOR PADDER
C4	500 MMF	OSCILLATOR COUPLING
C5, 7, 11, 12	10 to 30 MMF	IF TRIMMERS
C6	0.05	RF BYPASS
C8	0.1	AVC FILTER
C9	0.05	CATHODE BYPASS
C10	0.05	SCREEN GRID BYPASS
C13	0.00025	DIODE LOAD RF FILTER
C14	0.05	RF BYPASS
C15	0.005	AF COUPLING
C16	0.01	AF COUPLING
C17	0.1	AF BYPASS
C18, 19	8-8, 450V	DUAL ELECTROLYTIC FILTER
C20, 21	0.05	LINE NOISE FILTERS
C	350 MMF	GANGED TUNING
Co	350 MMF	GANGED TUNING

RESISTORS

REFERENCE NUMBER	VALUE (ohms) K=1000	DESCRIPTION
R1	20K, ½ W (watt)	OSC GRID LEAK
R2, 4	2 MEG, ½ W	DECOUPLING
R3	250, ½ W	CATHODE BIAS
R11	250, 1 W	CATHODE BIAS
R5	250K, ½ W	DIODE LOAD
R6	250K	DIODE LOAD AND VOLUME CONTROL
R7	10 MEG, ½ W	1st AF AMP GRID LOAD (OR LEAK)
R8	250K, ½ W	1st AF AMP PLATE LOAD
R9	50K, ½ W	DECOUPLING
R10	500K, ½ W	2d AF AMP GRID LOAD
R12	10K, 10 W	SCREEN SERIES DROPPING AND BLEEDER
R13	15K, 10 W	BLEEDER

TRANSFORMERS AND CHOKES

REFERENCE NUMBER	COIL DC RESISTANCE (ohms)	DESCRIPTION
T1	PRI —22 SEC— 5	ANTENNA
T2	PRI —20 SEC—20	455 KC INPUT IF
T3	PRI —20 SEC—20	455 KC OUTPUT IF
T4	PRI — 400 (Z 5K) SEC— 4	OUTPUT AF
T5	PRI —110V, 2 OHMS SEC—350-0-350V, 400 OHMS 5.0V FILAMENT, 1 OHM 6.3V FILAMENT, 1.5 OHMS	POWER TRANSFORMER
L	50 OHMS (10 HENRIES)	POWER SUPPLY FILTER

CHAPTER 4

COMMUNICATIONS RECEIVER

The communications classification covers a multitude of receivers. Though communications receivers may be less numerous than broadcast receivers, they show much greater variety in design and purpose. Communications receivers may be TRFs or superheterodynes. They may have switching and tuning arrangements for operation on several bands, or they may be fixed tuned for operation at a single frequency. Communications receivers may incorporate manual tuning or automatic tuning and may receive AM, FM, or pulse transmissions. Communications receivers may receive CW, tone, or voice modulation. They may be used for navigation, direction finding, or for aircraft instrument landings.

In spite of this great diversity, a superheterodyne receiver, basically very much like the one just studied, can serve as a typical communications receiver. Most communications receivers are superheterodynes. Many operate in the frequency range between 2.0 and 25 mc, although the use of VHF and UHF for communications is becoming more and more important. The greater number are commercial receivers, though many are manufactured expressly for military use. Most have provision for CW reception, as well as tone and voice.

Examine the block diagram of a typical communications receiver. Most of it should look familiar. Note, though, that two oscillator stages are represented. The heterodyne oscillator is called the *high frequency oscillator* (HFO). The other oscillator is called the *beat frequency oscillator* (BFO). The output of the BFO beats against the IF signal to produce a difference frequency in the audio range. Note, too, the crystal filter. It provides IF selectivity and is part of the fixed tuning arrangement of the IF section. The noise limiter and squelch stages are used to combat noise and increase the effective sensitivity of the receiver. The tuning indicator is included to provide simpler, more accurate tuning.

All these special circuits, as well as others not shown in the block diagram, are important. Each of them deserves a detailed explanation. Two specific receivers used by the Air Force are discussed at the end of the chapter.

CRYSTAL FILTER

The crystal filter acts as a selective coupling between the converter and the first IF amplifier. A crystal can be used as a filter, because it acts as a series-tuned resonant circuit. Because of its very high Q, the crystal filter passes a much narrower band of frequencies than the best conventional tuned circuits. It may pass a band as narrow as 1,000 cycles or less while the narrowest band passed by IF tuned circuits is about 5 kc. Therefore, it is used effectively for CW reception.

The crystal filter is usually controlled by a switch so that its use can be optional. Because of its high selectivity, the filter rejects signals close to the desired signal. Also, because of its selectivity it reduces the amount of noise in the receiver output. Since the crystal filter acts as a high Q series resonant circuit tuned to the intermediate frequency, it permits high current flow at the resonant frequency and sharply attenuates other frequencies.

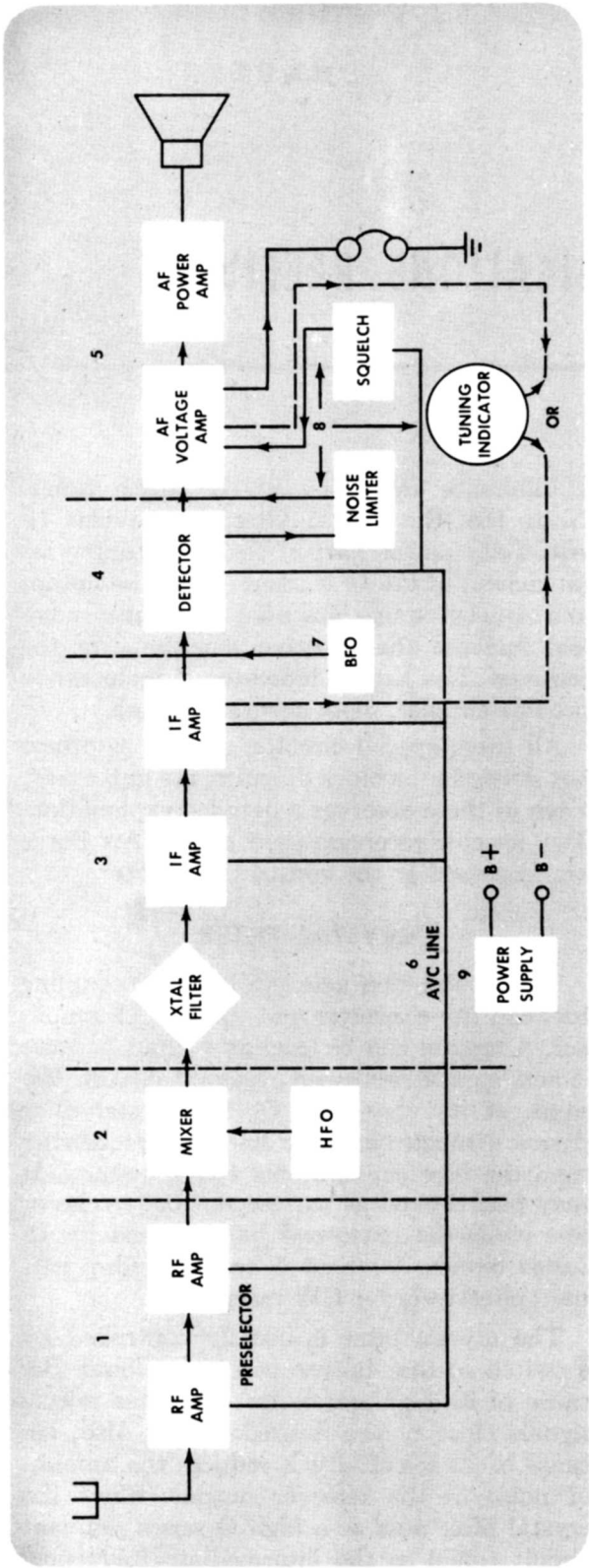

Typical Communications Receiver

Equivalent Circuit

Examine the equivalent circuit of the crystal and crystal holder. The components L, C1, and R represent the crystal series resonant circuit. C2 represents the parallel capacitance of the crystal holder. Thus, the crystal at series resonance offers a short circuit path to the desired frequency and a high impedance path to other frequencies. However, the crystal holder capacitance, C2, shunts the crystal and offers a path to undesired frequencies. In a practical crystal filter circuit some means must be provided to counteract the shunting effect of the crystal holder. To see how this is done, look at the actual circuit diagram of the crystal filter circuit at B.

Variable capacitor C5, called the *phasing capacitor*, counteracts the holder capacitance (C2 in the diagram at A). C5 can be adjusted so that its capacitance equals the capacitance of C2. Then both C2 and C5 pass undesired frequencies equally well. The voltages across them due to undesired frequencies are equal and 180° out of phase since the secondary of the input transformer is centertapped. Therefore, undesirable voltages cancel, and undesired signals are not applied to the grid of the IF amplifier.

Actually, there is only one frequency in the filter's pass band at which total cancellation takes place. This occurs at the frequency at which C5's capacitive reactance equals that of the effective capacitance of the holder-crystal combination. Since the crystal's impedance varies with frequency, the effective capacitance of the holder-crystal combination also varies. However, C5 can be adjusted to cause exact cancellation at any frequency within the pass band except for frequencies

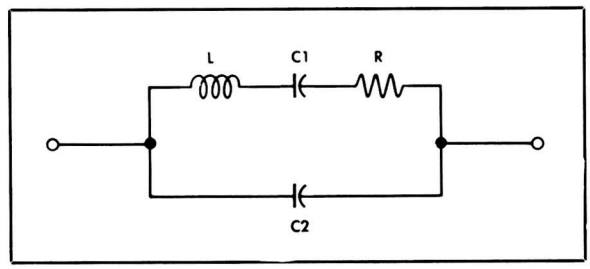

Mounted Crystal Equivalent Circuit

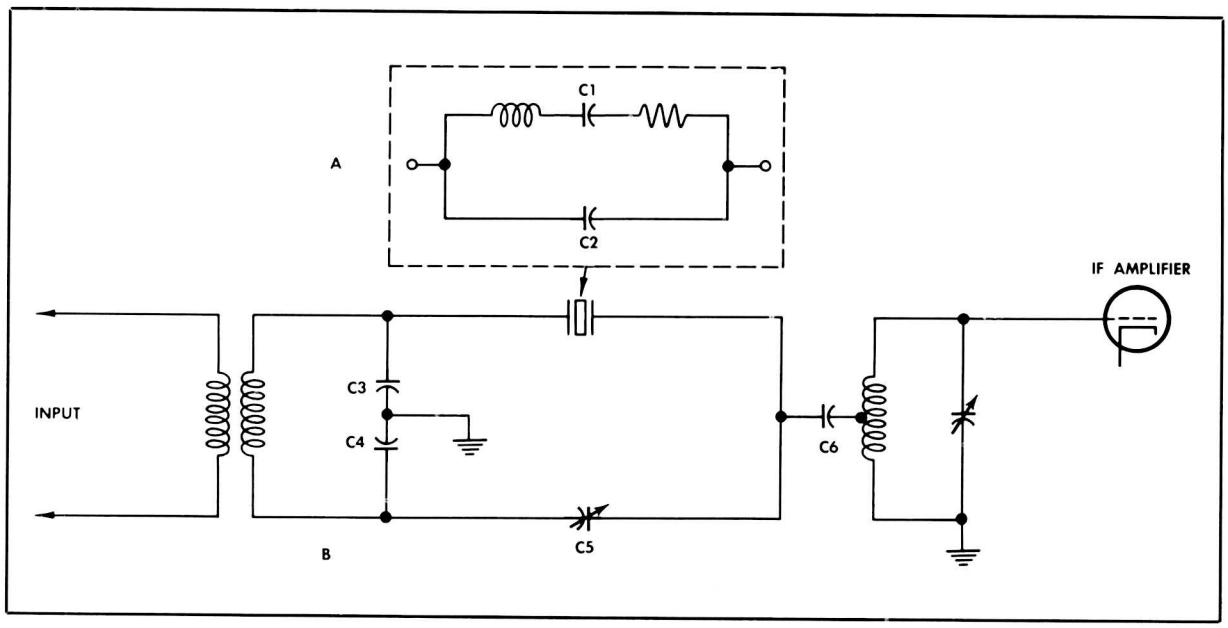

Crystal Filter Circuit

very close to the crystal's resonant frequency. This cancellation effect is called the *rejection notch*.

To understand why the rejection notch may be positioned as desired by varying C5, the effective impedance of the holder-crystal combination must be considered. At the crystal's series resonant frequency, its capacitive and inductive reactances are equal and effectively cancel. As the frequency is increased, the inductive reactance increases while the capacitive reactance decreases so that the crystal's impedance becomes inductive. At some frequency slightly higher than the crystal's series resonant frequency, this net inductive reactance of the crystal equals the capacitive reactance of C2. This is the parallel resonant frequency of the holder-crystal combination. At still higher frequencies, the net inductive reactance of the crystal exceeds the capacitive reactance of C2 so that the impedance of the holder-crystal combination becomes capacitive. C5 can be adjusted to be equal to this effective capacitance. Thus, the rejection notch can be positioned at frequencies above the holder-crystal combination's parallel resonant frequency.

At frequencies below series resonance, the crystal's capacitive reactance exceeds its inductive reactance and the net crystal impedance is capacitive. This capacitance, paralleled with C2, causes the holder-crystal combination's impedance to be capacitive.

Thus, the effective impedance of the holder-crystal combination is capacitive at frequencies below the crystal's series resonant frequency and at frequencies above the holder-crystal combination's parallel resonant frequencies. C5 can be adjusted, then, to equal the effective capacitance of the holder-crystal combination and to position the rejection notch at the desired point.

Response Graph

Now look at the response graph for the crystal filter on page 44. The crystal is series resonant to 465 kc, the IF. At that frequency, the relative gain is 1000. At 461 kc, and at 469 kc, the relative gain is only 1. The decibel loss is 60, as compared to the response at 465 kc.

The rejection notch is positioned at 463 kc. Thus the relative gain of the crystal filter to 463 kc is also 1, and the relative loss in decibels is 60.

The rejection notch can be used to good advantage, since it will aid in making the receiver's response very selective. For example, the BFO can be set at a frequency of

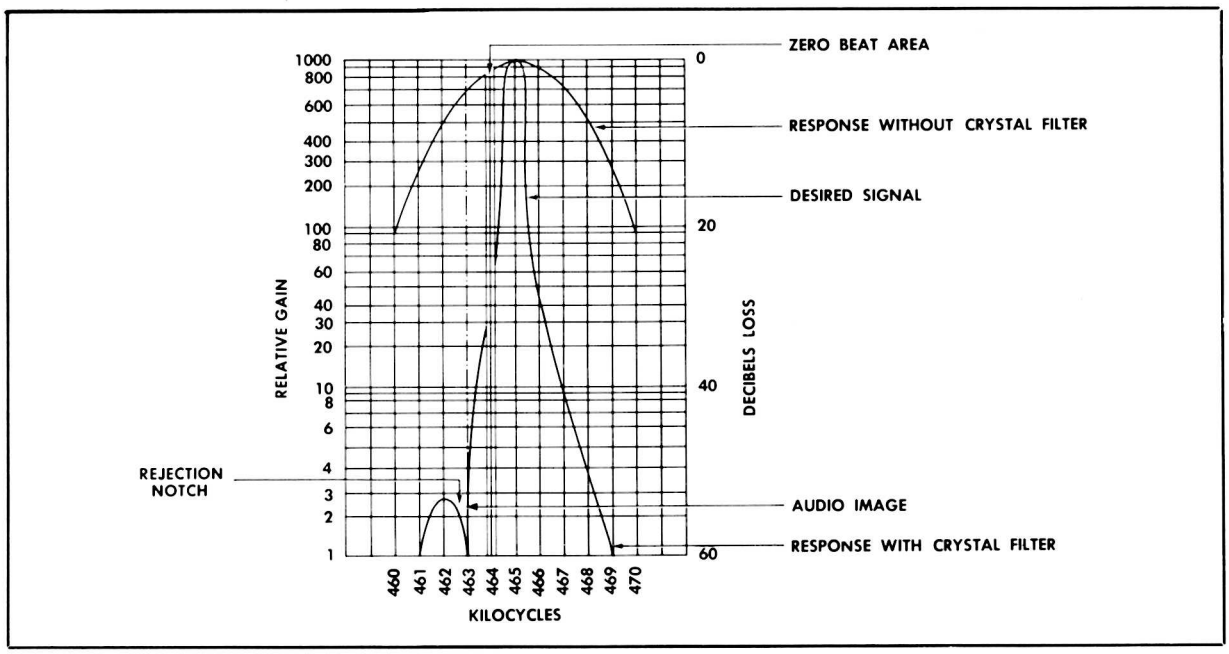

Crystal Filter Response Graph

464 kc. Then for CW reception, the BFO output combines with the IF output of 465 kc to produce a 1-kilocycle audio tone. However, if there were no rejection notch, the BFO output could also combine with a frequency of 463 kc to produce a 1-kilocycle audio tone. With the rejection notch in the crystal filter's response curve, a frequency of 463 kc is blocked. Thus, while the narrow band-pass of the crystal filter circuit makes the receiver's response highly selective, in addition, the rejection notch can be used to attenuate a strong undesired signal that falls within the pass band.

Q of Crystal Circuit

The Q of a crystal is naturally very high. This means that while the impedance it presents to its series resonant frequency is low, the impedance presented to other frequencies is comparatively very high. Thus, at the desired frequency, the crystal could be represented by a small impedance, and at other frequencies, by a large impedance. However, the ratio of these crystal impedances to the impedance across which the output of the crystal circuit is developed must be carefully selected if the filter is to operate efficiently. For example, if the series resonant impedance could be presented by 100 ohms, and its impedance to an undesired frequency by 10,000 ohms, then the impedance across which its output is developed should be closer to 100 ohms than 10,000 ohms. If the impedance across the output were 10,000 ohms, then one-half of the voltage at the undesired frequency would be dropped across the crystal and one-half across the output. At the desired frequency, 1/100 of the total voltage would be dropped across the crystal and 99/100 would be dropped across the output. Since the undesired signal is cut to only one-half of its value, the filter is not functioning very effectively. If, however, the impedance across which the crystal's output is developed were 100 ohms, then 99/100 of the undesired signal voltage would be dropped across the crystal and only 1/100 would be present in the output. This would be efficient filtering action.

Obviously, the impedance across the output of the filter circuit must be carefully chosen, since it helps to determine the band of frequencies which will be passed by the crystal filter circuit. At B in the circuit diagram of the crystal filter circuit shown previously, note that the crystal output is tapped down

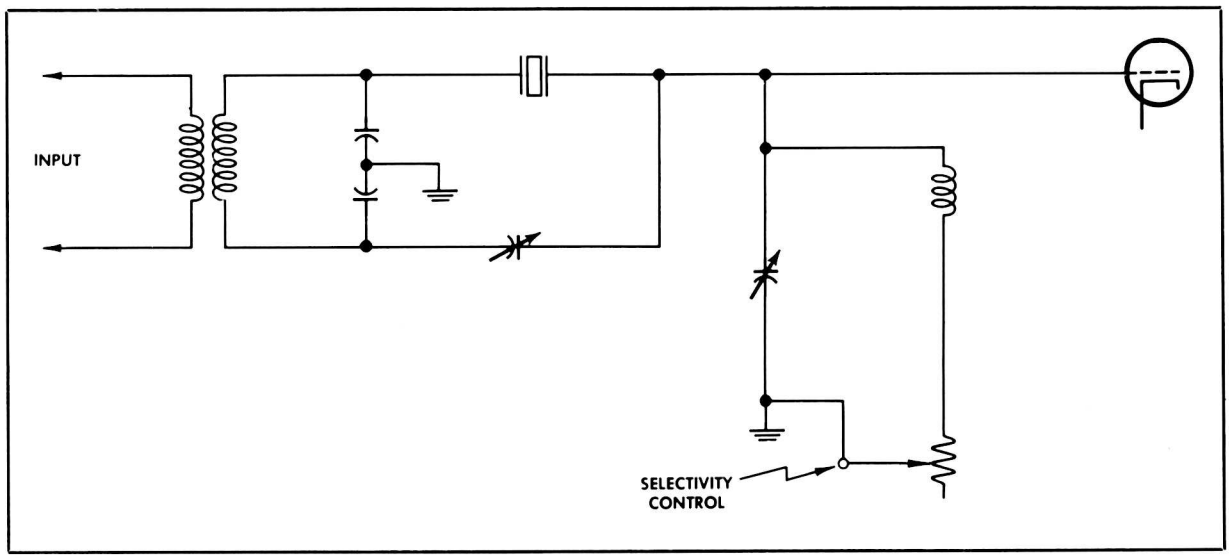

Crystal Filter with Variable Selectivity

on the coil of the tank circuit. By tapping down on the tank circuit, a suitable output impedance can be selected.

By varying the output impedance, the effectiveness of the filter can be varied. This offers a means of controlling the bandpass of the filter circuit. In the circuit shown above, the setting of the selectivity control determines the effective Q of the tuned circuit across which the crystal filter's output is developed. By varying the Q, the total impedance of the parallel resonant circuit is varied. This controls the effectiveness (and thus bandwidth) of the filter and provides positive selectivity control.

COMMUNICATIONS RECEIVER AVC CIRCUITS

Communications receivers use manual gain control (MGC), manual volume control (MVC), and automatic volume control (AVC). The circuits you studied before in connection with TRF receivers are generally applicable. Communications receivers also use a type of volume control called *delayed automatic volume control* (DAVC), and a type called *delayed* and *amplified* automatic volume control.

Delayed AVC

The AVC voltage normally is in direct proportion to the strength of the detected signal. Even the weakest signal produces a slight negative voltage. With AVC, this results in a slight loss in amplification. Such reduction in the amplification of weak signals is undesirable, because such signals are difficult to read at best.

To correct this situation, delayed volume control is used. Delayed volume control is a method which exempts weak signals from automatic volume control and allows them full amplification. DAVC goes into action only when signals exceed a set minimum signal strength.

Look at the typical DAVC circuit shown on page 46. Operation of DAVC requires a diode. In the circuit diagram, the diode of a multipurpose tube is used. In the one envelope is included a diode section for detection and a diode section for DAVC. The detector section uses plate D1 as its diode plate. The DAVC section uses plate D2.

In the diagram, the parts of the circuit important to DAVC action are shown in heavy outline. The IF signal is applied to both diode plates simultaneously. Plate D1 conducts immediately when the IF voltage swings positive. As a result, an AF voltage is developed across R1 as the current flow returns to the cathode. Plate D2, however, does not begin to conduct at the same time as D1. Plate D2 does not conduct until the voltage applied to it is high

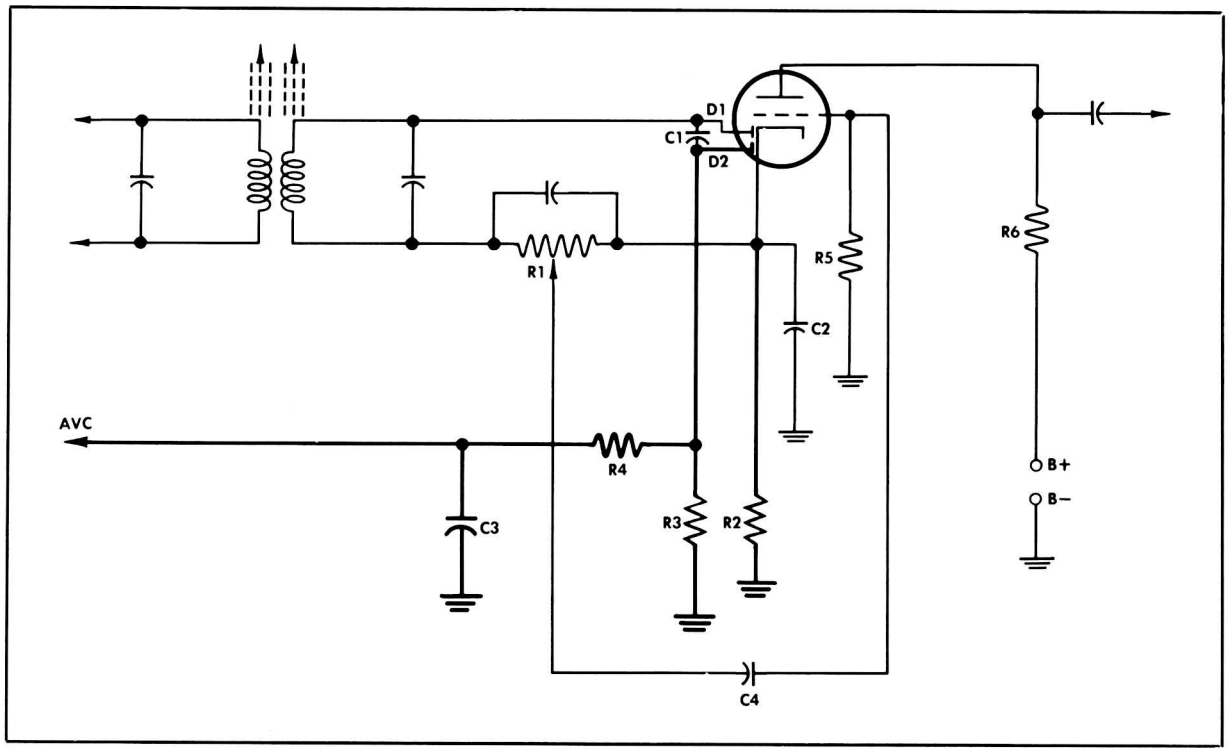

Delayed AVC

enough to offset the voltage drop across R2.

When D2 does draw current, C1 charges on the positive swing (becomes negative at the bottom in respect to the top). On the negative swing, C1 discharges down through R3. This action is repeated for each cycle of the IF. The voltage drop across R3 is used for the AVC voltage. It is fed back to the grid circuits of the amplifier stages to reduce gain. R4 and C3 form a filter to remove RF and AF components. Since D2 does not conduct until the voltage is high enough to overcome the bias on R2, there is no AVC in operation until the signal strength is greater than the voltage drop across R2. Above that value, normal AVC voltage is developed. This means that AVC action takes place only for strong signals. The voltage applied to the first audio amplifier (the triode section of the twin diode-triode) is taken from across R1, the detector load.

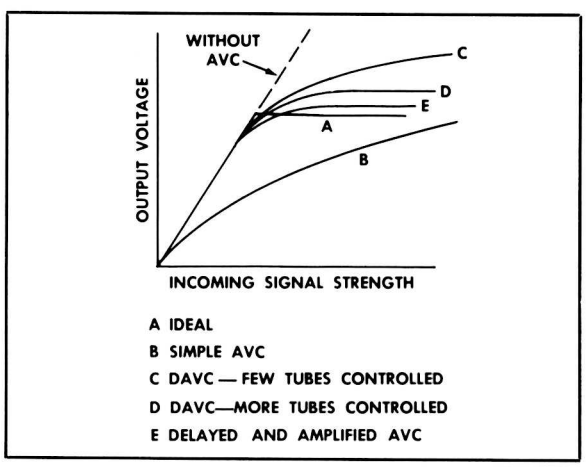

AVC Response Curves

Delayed and Amplified AVC

An ideal DAVC should operate so that weak signals get full amplification while strong signals are held to a satisfactory, uniform level. Such an ideal AVC response is shown at A of the graph at the left. B shows the response of simple AVC. C shows the response of DAVC when only a few stages are controlled. D shows DAVC with more tubes controlled. E shows the response of a special kind of DAVC called *delayed and amplified AVC*. Its response comes quite close to the ideal. To see how this is achieved, study the circuit for delayed and amplified AVC.

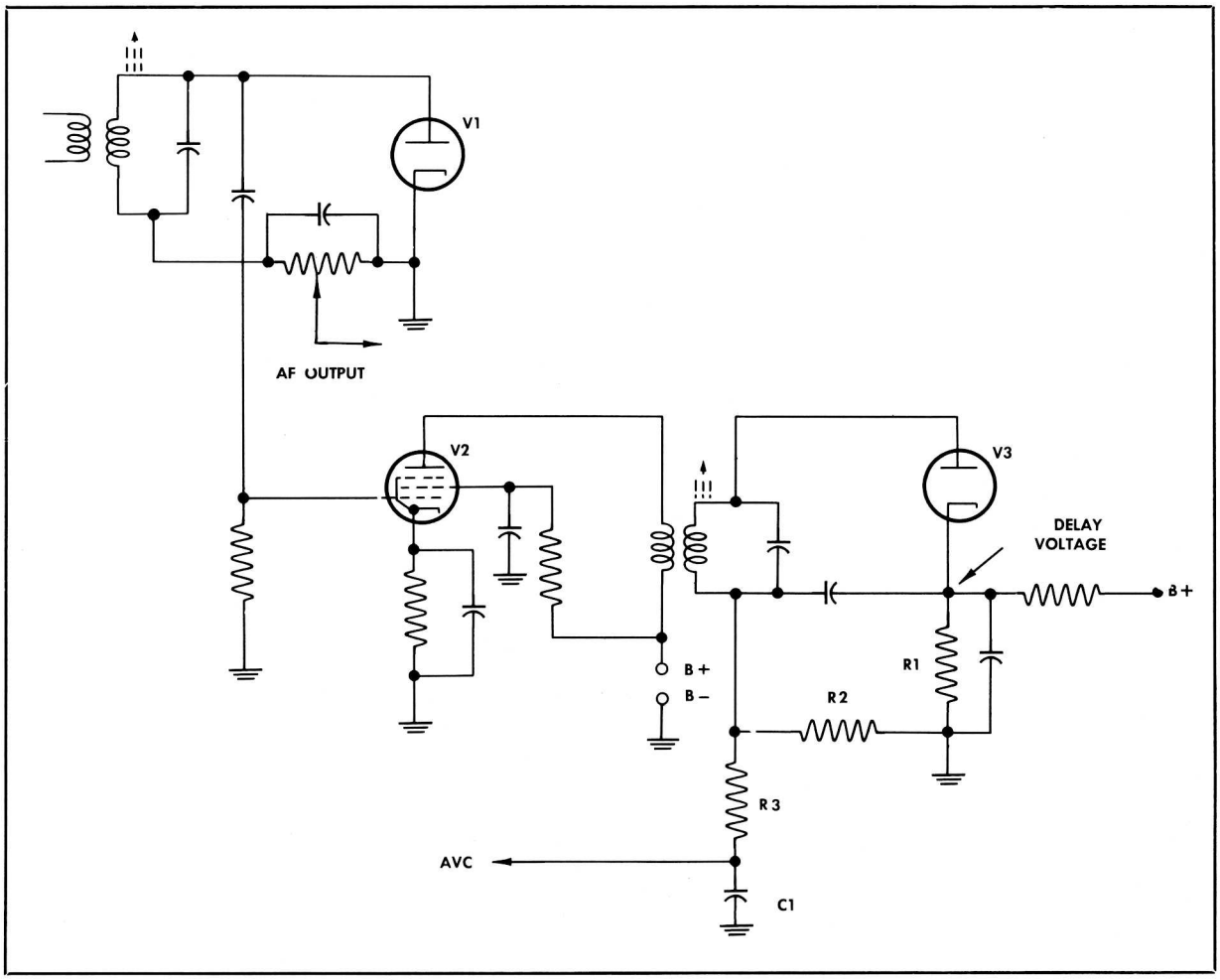

Delayed and Amplified AVC

V1 is the detector. V3 is a separate DAVC tube. The IF signal is applied to V1 for detection. It is also applied to V2, an IF amplifier used to provide a separate channel for the DAVC circuit. The output of this amplifier is applied to the DAVC diode. Because of the separate channel IF amplifier, the IF signal applied to the DAVC diode is stronger than the signal applied to the detector diode. As a result, the AVC voltage taken across R2 increases more rapidly than the signal strength applied to the detector. Thus, with proper gain in V2, the response to strong signals is almost constant.

Use of AVC for CW Reception

Special precautions to maintain high sensitivity must be taken when AVC is used for reception of CW signals. The BFO, which makes CW reception possible, produces a strong signal which plays its part in forming the AVC voltage. Thus, the BFO helps to reduce gain. This reduction in gain becomes excessive unless special measures are taken. The CW switch shown in the circuit diagram on page 48 permits two precautionary measures.

The switch has three positions. In the A position, B+ is connected to the BFO and the AVC is grounded. In this position, the switch permits CW operation without AVC. In the B position, the switch connects B+ to the plate of the BFO and adds a capacitor to the AVC circuit. This 0.25-mfd capacitor increases the time constant of the decoupling filter so that the AVC voltage does not follow the make-break characteristic (the interrupted

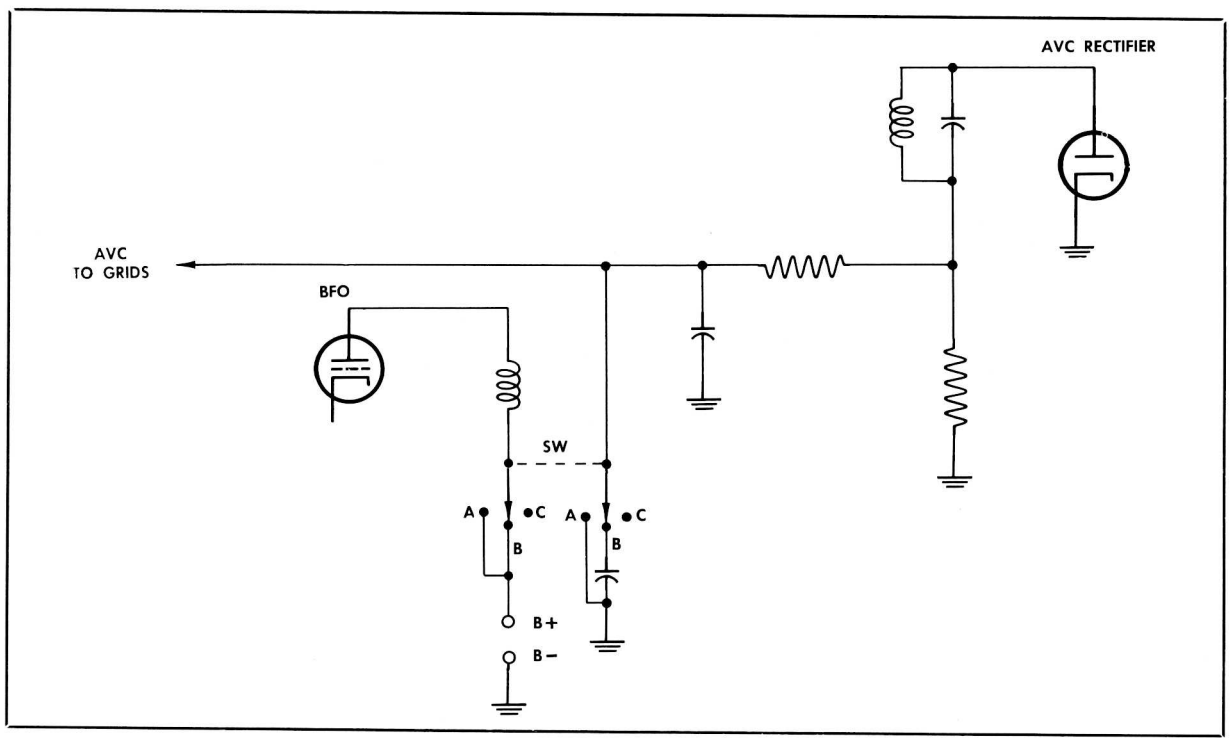

AVC with CW Reception

carrier) of the CW signal. In position C of the switch, no B+ is applied to the BFO so that it is inoperative, while the AVC remains normally operative.

Some communications receivers achieve satisfactory CW reception while AVC is operating by taking the IF signal for the AVC detector before the point where the BFO oscillations are introduced. Thus, the BFO cannot affect the amplitude of the AVC voltage. Such an arrangement is called a *separate AVC channel.*

BEAT FREQUENCY OSCILLATOR

To enable a superheterodyne receiver to obtain intelligence from a CW transmission, a beat frequency oscillator is used. The output of the BFO heterodynes with the IF and produces a difference frequency which is audible. A BFO, set at 466 kc, can heterodyne with a 465-kc IF to produce an audio frequency of 1000 cps.

Notice the typical BFO circuits at the right. The circuit at A, a modified Hartley, is widely used. The circuit at B, an Armstrong, is used in some Air Force equipment. At C is an electron coupled Hartley, an oscillator of good stability.

These oscillators are heterodyned against the IF through the various kinds of coupling. At A, coupling is through a small capacitor, 1 or 2 mmf, to the plate circuit of the final IF amplifier. At B, a few turns of insulated wire around the lead to the plate of the detector provide capacitive coupling without a capacitor. The capacity between the coupling wire and the wire of the plate lead accounts for the transfer of the signal. With this type of coupling, the output of the BFO must be kept low to prevent blocking of the detector. At C, there is capacitive coupling to the grid of the final IF amplifier.

The stability of the BFO is important. Therefore, a voltage regulator is frequently used for the plate supply voltage. In addition, the BFO is well shielded to prevent coupling of harmonics to the preceding IF and RF stages of the receiver. In some cases, for stability and shielding, the BFO is enclosed in an insulated, temperature-controlled compartment.

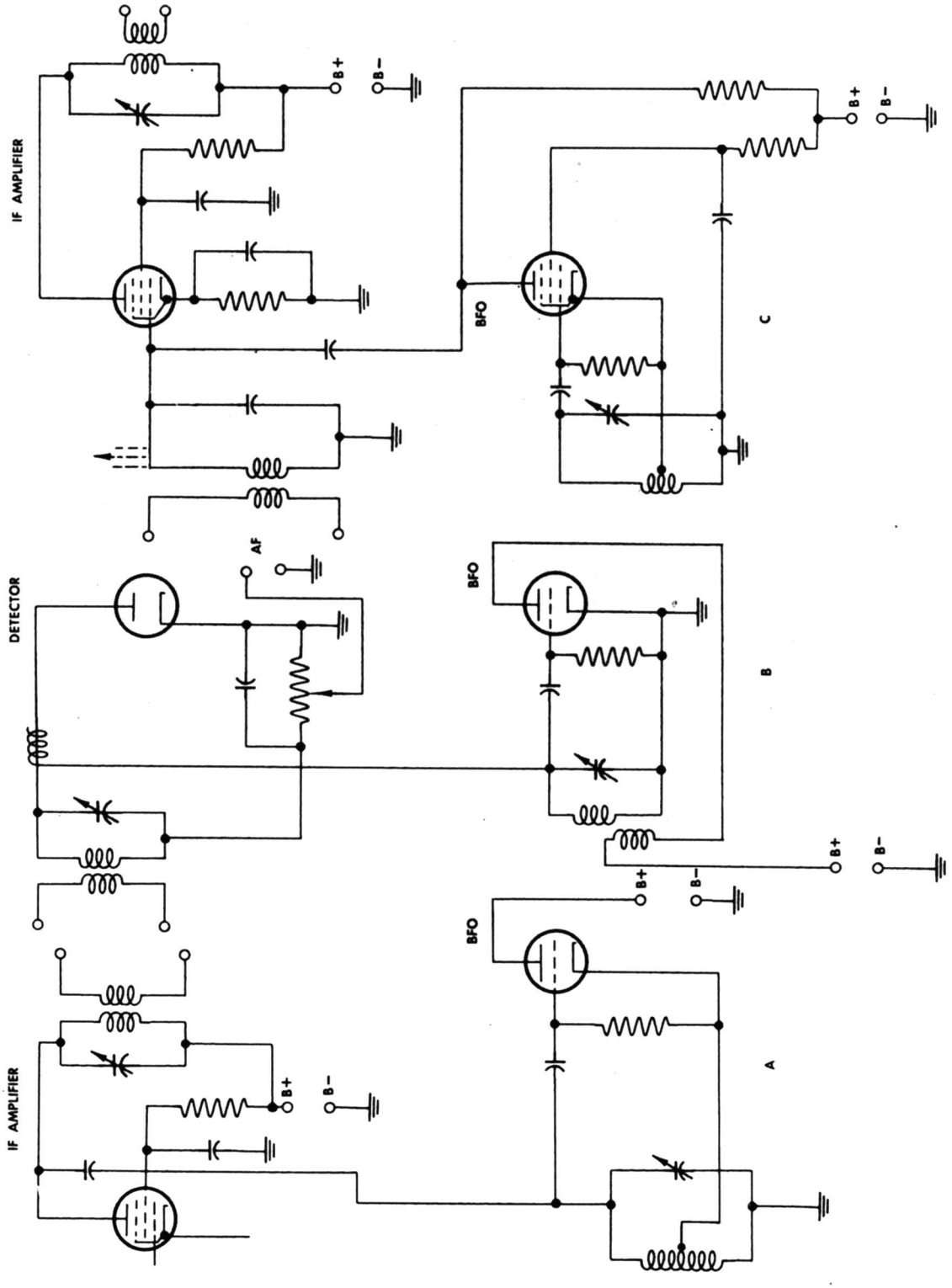

Beat Frequency Oscillators

NOISE CONTROL CIRCUITS

Whenever there is an electric current, whether in nature or in man-made equipment, there is some radiation of electrical energy. Whenever electricity breaks down the insulation of air, whether in the form of a bolt of lightning or a discharge across the points of a sparkplug, there is RF radiation from what is effectively a spark gap transmitter. The air is always filled with such radiations, usually without fixed frequency. When these radiations get into a communications receiver. they are classed as noise. At the receiver antenna, these radiations compete with the radiations of regular transmitters. When the antenna intercepts a signal, it also intercepts some noise. If the signal is weak, the noise may make it unreadable.

Battles have been won and lost in terms of signal-to-noise ratio. Battles have been saved by the skill and persistence of resourceful operators who managed to read intelligence under almost impossible conditions. In fact, the signal-to-noise ratio can be so important that radio engineers have developed special jamming equipment designed solely to make noise to prevent successful communication by an enemy.

The signal-to-noise problem affects all receivers, but it is the communications receiver that must meet the problem head on. With a communications receiver, you can't just turn to another station to get a program just as good. The communications receiver is usually assigned to definite channels and stations. It must do the best it can with the signals it receives.

Of course, the receiver itself uses electricity, and the receiver itself generates some of the noise which appears in its output. For one thing, energy may be coupled improperly from one circuit to another to produce noise. For another, the movement of electrons in a tube can produce noise.

Some of the noise in a receiver output may originate in the power supply system of the receiver. Improper filtering and shielding may allow generator or dynamotor frequencies to penetrate to the receiver audio output.

Some of the noise in a receiver output may originate in the transmitter. It may be brought to the receiver as modulation impressed on the RF carrier.

Many effective measures to combat noise are incorporated in radio components and transmitter and receiver units. Some of the most effective of these measures involve the use of circuits specially designed to reduce noise.

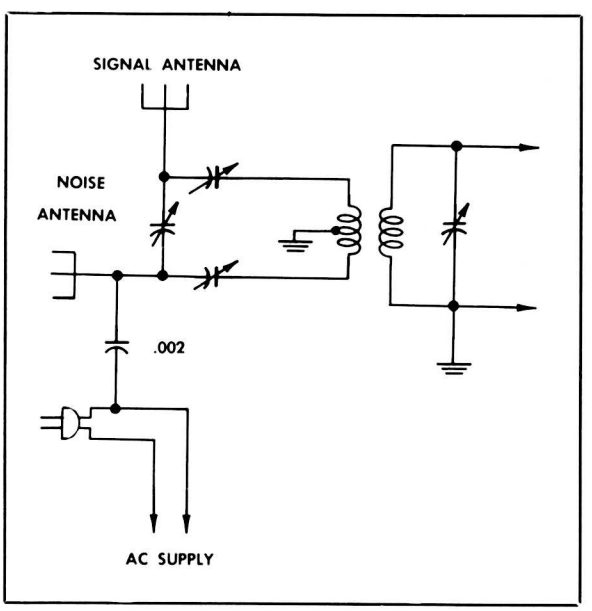

Noise-Balancing Antenna

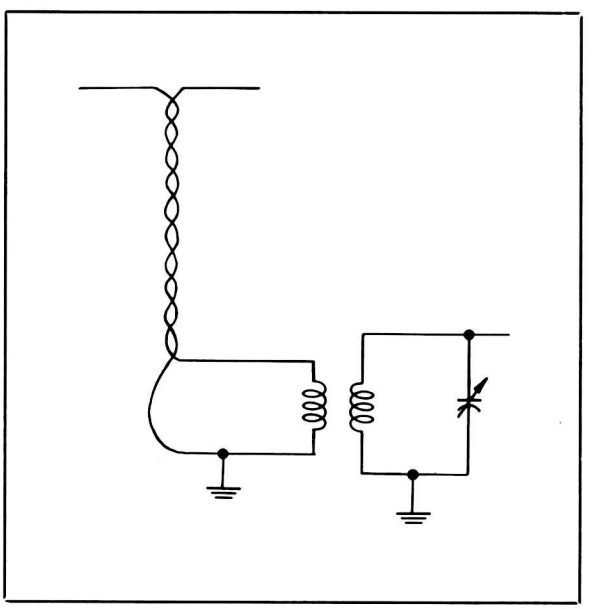

Twisted Pair for Noise Reduction

Noise-Balancing Antenna Circuits

Power line interference can be reduced by the special arrangement on page 50. Here a noise antenna introduces noise to the input circuit in such a way as to cancel the same noise introduced by the signal antenna. Cancellation takes place across the two halves of the grounded primary of the transformer. For best results, the noise interception of each antenna must be about equal. There must be considerable experiment and adjustment before noise interception is equalized. Consequently, the arrangement works best for a fixed station where the source of noise is also fixed. Of course, this arrangement could cause cancellation of the signal, too. However, the tuning and location of the signal antenna enable it to intercept signal energy much more effectively than the noise antenna. Thus, only part of the signal is cancelled. Furthermore, although the signal is weaker, it is more readable because the noise is eliminated.

Now examine the noise-balancing circuit which uses a twisted pair to cancel noise. In this circuit, the antenna is far enough away from the noise source that it does not itself pick up the noise. However, the leadin does pick up noise. Therefore a twisted pair is used as the leadin. The noise field of one conductor is cancelled by the noise field of the other, and the noise input to the receiver is minimized.

Series Noise Limiter

Much receiver noise consists of high voltage pulses of very short duration. The amplitude of the noise pulses is much higher than the usual signal voltage amplitude. Therefore, the limiter circuit can use the high amplitude of the noise pulse to block the receiver. Since the noise pulse is of very short duration, the receiver is blocked for such a short time that it cannot be noticed by the ear.

The limiter is arranged to block the receiver

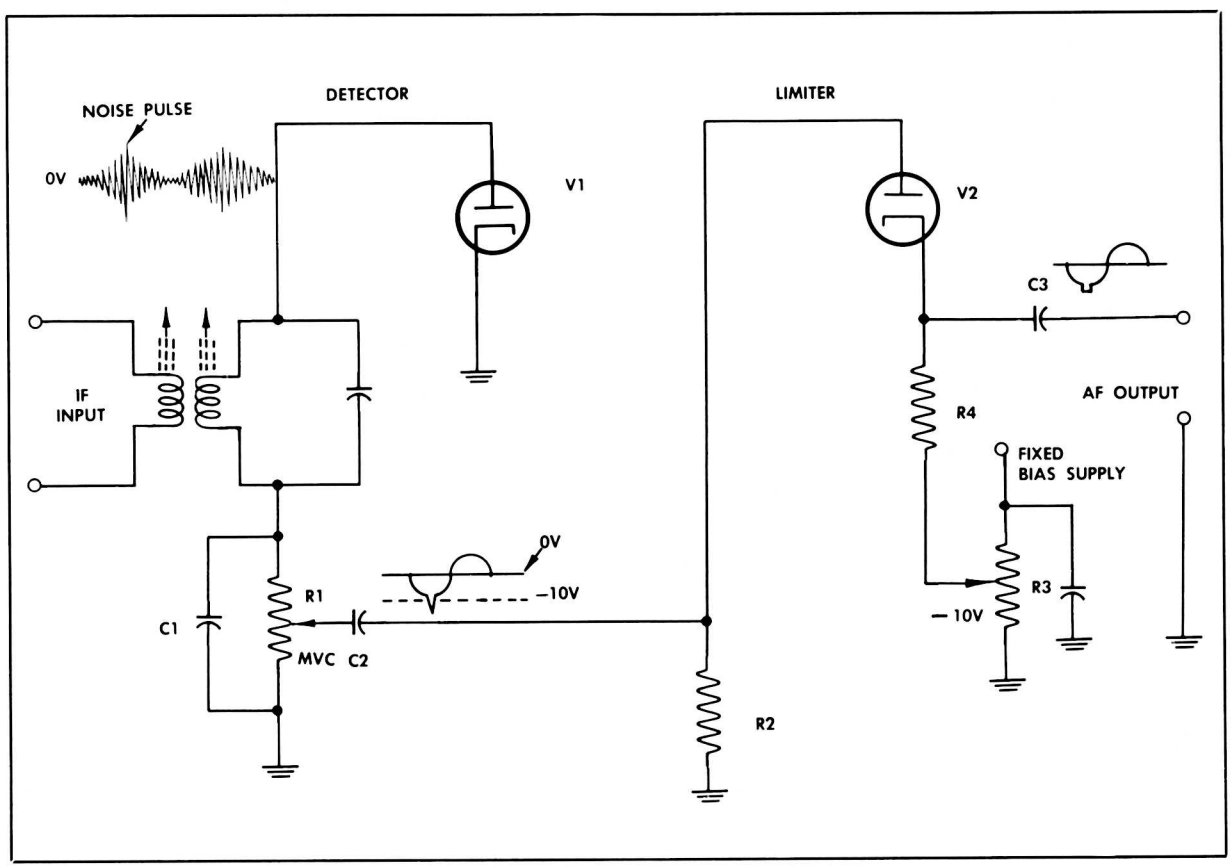

Series Noise Limiter

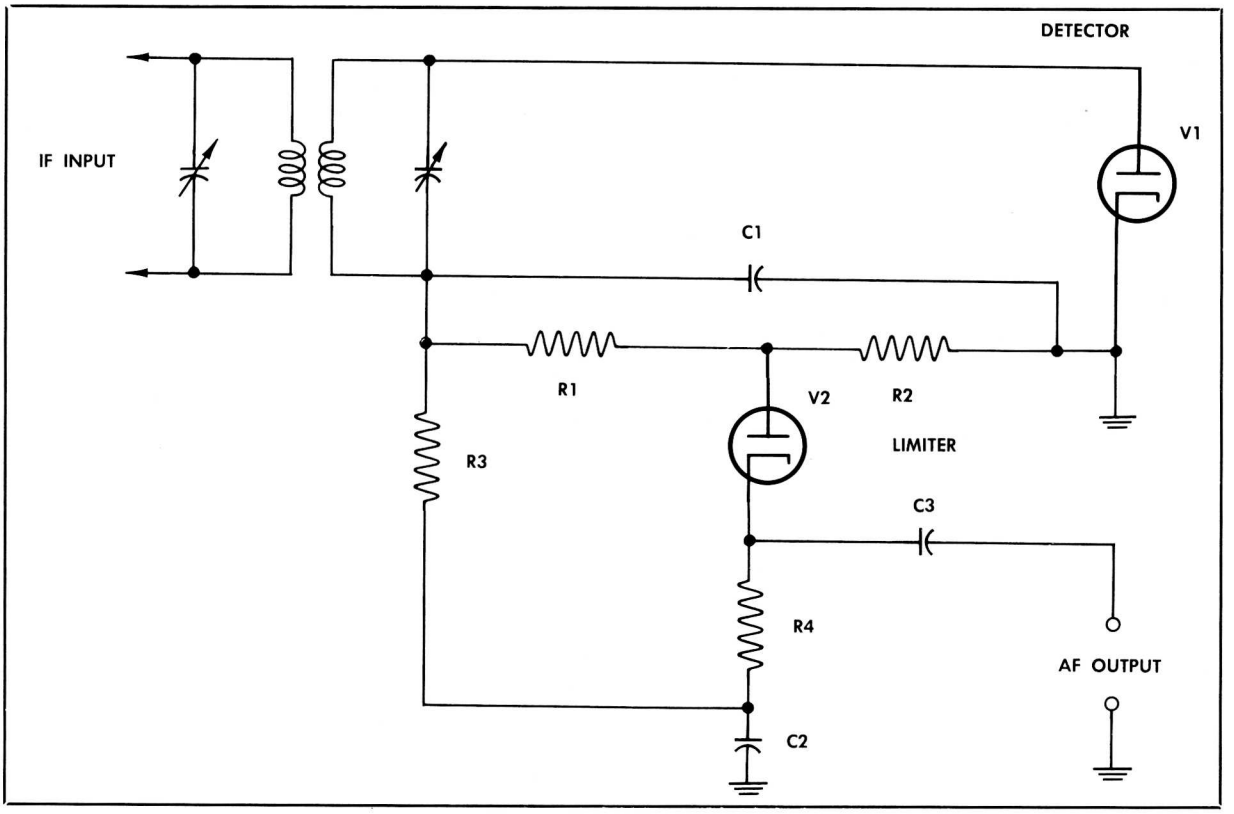

Self-Adjusting Series Noise Limiter

whenever the noise voltage exceeds a certain level, a level higher than the usual signal voltage. Thus, the receiver is silent during noise pulses. The noise does not get through, but the signal does.

The limiter uses the diode following the detector stage. In the series limiter circuit diagram on page 51, the limiter is V2. Note the noise pulse shown in the waveform applied to the diode plate.

The output of the diode detector, V1, is present across R1, a potentiometer used for MVC. This output is a pulsating DC, negative in respect to ground. Coupling capacitor C2 blocks the DC from the limiter plate but passes the AF component. The AF component containing a noise pulse is illustrated by the waveform. The limiter has a variable cathode voltage usually set at approximately −10 volts. Thus, all voltages applied to the plate which do not drive the plate 10 volts negative are passed through the diode limiter. All voltages which go more than 10 volts negative (the noise voltages) cut off the tube and are not passed.

The limiter is normally conducting so that the audio voltage appears across R4 and is applied to the following amplifier. When the noise pulse, which is more negative than −10 volts, is applied, the limiter momentarily stops conducting and no voltage appears across R4. The waveform with the noise pulse clipped off illustrates the AF coupled through C3 to the output.

Self-Adjusting Series Noise Limiter

The cathode voltage of the limiter tube can be made self adjusting, as shown in the circuit diagram above. The detector (V1) is conventional except that its load resistance is divided between two resistors, R1 and R2. The plate of the limiter is connected between R1 and R2. Thus, part of the voltage drop across the two resistors is applied to the limiter plate. At the same time, the full

voltage drop across the two is applied to the limiter cathode. This means that the DC plate-to-cathode voltage of the limiter equals the voltage drop across R1. This voltage drop, of course, varies with the detector output. Thus, with a strong signal the voltage drop increases and so does the DC plate-to-cathode voltage. With a weak signal, these voltages decrease.

You might think then, that the limiter could never be cut off, since DC plate-to-cathode voltage adjusts to signal strength. However, the time constant of R3 and C2 is such that the cathode voltage does not immediately follow a sudden decrease in plate voltage as during a noise pulse. On the noise pulse, the plate voltage decreases instantaneously, but the cathode voltage decreases slowly. Thus, the tube is cut off, and for a fraction of a second there is an open circuit. When there is a less sudden decrease in plate voltage, as when there is a slow change in signal strength, cathode voltage can follow it closely. Thus, the diode acts as a short circuit at all times except during noise pulses. As a short circuit, it passes the AF signal.

This circuit is widely used in Air Force equipment.

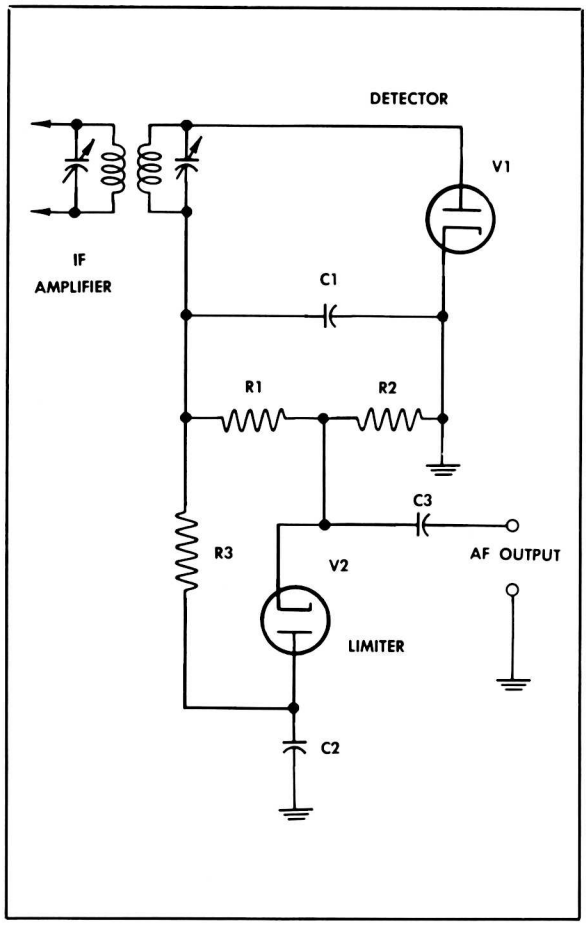

Shunt Noise Limiter

Shunt Noise Limiter

In a shunt limiter circuit, the limiter diode acts as a short circuit for noise voltages. This is the opposite of the series limiter which acts as an open circuit for noise voltages.

In shunt limiter circuit, the cutoff level is also self-adjusting. As you can see in the diagram above, part of the voltage drop across the two load resistors R1 and R2 of the detector V1 is applied to the cathode of V2. The complete voltage drop is applied to the plate. Since the voltage drop is negative in respect to ground, the plate is more negative than the cathode, and the tube is cut off. The time constant of R3 and C2 is such that plate and cathode change together for signal voltages, and the limiter diode remains cut off. However, the time constant is such that, on sudden noise peaks, the plate voltage does not follow the cathode voltage. On noise peaks, the cathode is driven negative instantaneously until it is more negative than the plate. The tube then conducts, shorting the noise voltage to ground through C2.

Note that the cathode voltage is coupled to the AF output. The cathode voltage represents the voltage drop across R2. When V2 conducts, it short circuits R2 as far as AF is concerned. Thus, for the duration of the noise voltage, there is no AF output.

Separate Channel Noise Limiter

In some communications receivers, a separate channel noise limiter system is used. This prevents the strength of the BFO signal from affecting the noise limiter.

As shown in the circuit diagram on page 54, the separate channel consists of a noise amplifier and twin diode noise rectifier. The IF signal is applied partly to the first IF amplifier, and partly to the noise amplifier. The part

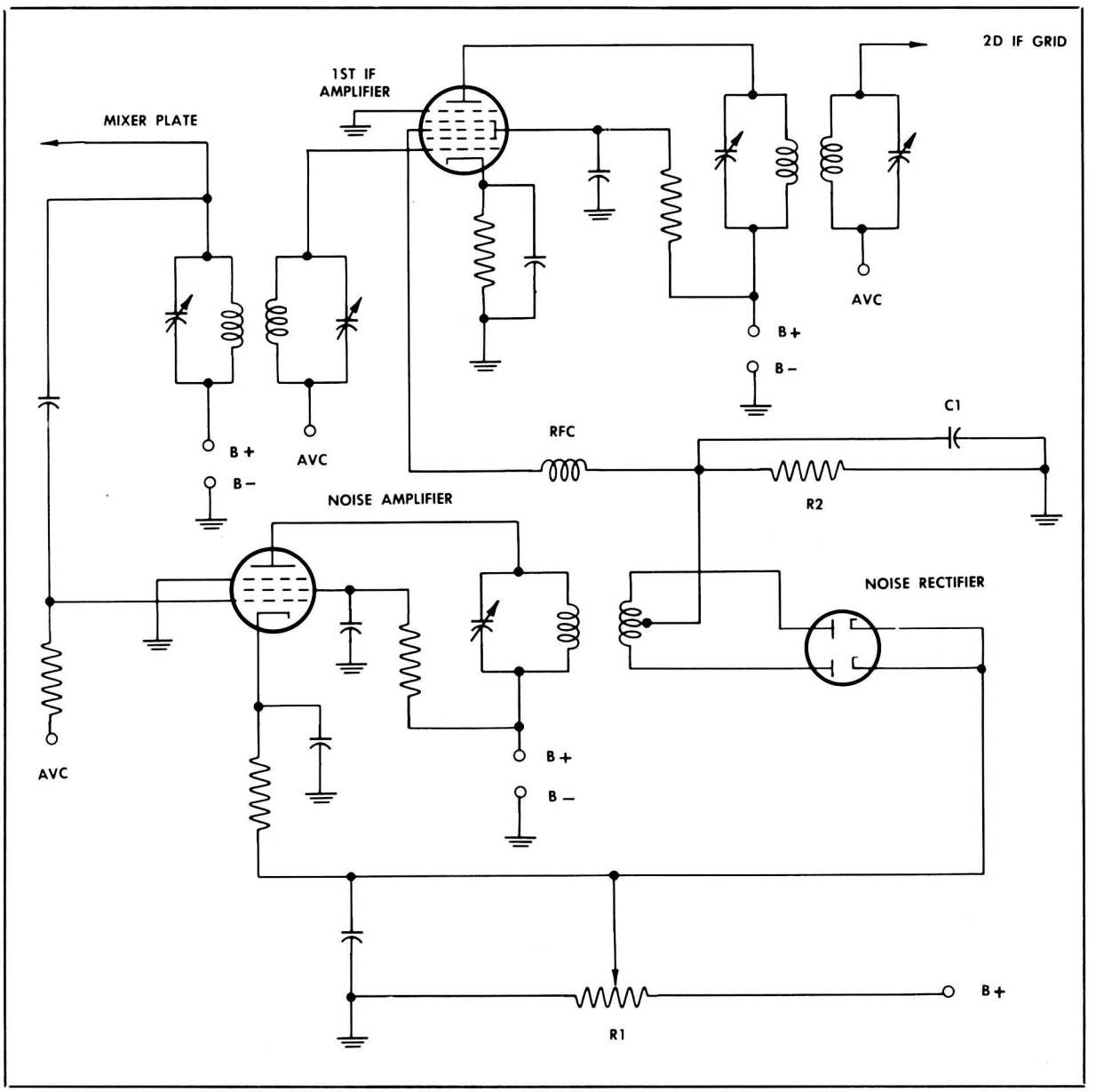

Separate Channel Noise Limiter

applied to the noise amplifier is amplified and then applied to the plates of the diode limiter (noise rectifier). The bias of both the noise amplifier and rectifier is controlled by the threshold control R1. Adjustment of the threshold control is critical. If it is set too low, the circuit will cause a reduction in the signal to the second IF amplifier. If it is set too high, some noise will not be removed. The voltage on the noise rectifier is adjusted below cutoff, so that the normal IF signal applied to it is not sufficient to bring it out of cutoff. When there is noise, however, the voltage becomes high enough to bring the noise rectifier out of cutoff. When the noise rectifier is brought out of cutoff and conducts, current flows through R2 and develops a negative voltage which is applied to the second control grid of the 1st IF amplifier. This cuts off the IF amplifier for the duration of the noise pulse. To prevent the IF signal itself from being applied to the second control grid of the first IF

amplifier, an RF choke is used. This choke, between the noise rectifier and the second control grid of the first IF amplifier, blocks the IF.

Because of the short duration of a noise pulse, the momentary blocking of the IF signal is unnoticeable. The elimination of noise takes place before the BFO output is mixed with the IF signal. Normal AVC is applied to the first control grid of the first IF amplifier through the IF transformer.

Basic Squelch Circuit

While communications receivers are in a standby position, or being tuned between stations, they are far from quiet. With no signal, the receiver is in its most sensitive condition, as no AVC is developed. Noise reaches its highest volume. Good communications receivers eliminate this no-signal noise by a muting system, sometimes called *quiet AVC* (QAVC). Sometimes, it is called *interchannel noise suppression*, sometimes *squelching*, and sometimes *tuning silencing*. A basic squelch circuit is shown in the illustration below.

The triode section of V1 serves as a squelch tube. When no signal is being received, there is no rectification, and neither diode section of V1 conducts. Consequently, there is no voltage drop across R3. There is no voltage applied to the grid of the triode section of V1, and it conducts. Neither is there any voltage applied to the grid of V2 through C6. However, since the triode section of V1 conducts, there is a voltage drop across R6. This is applied to the grid of V2 and is sufficient to cut off the tube. Thus, with no signal, neither diode section of V1 conducts, and V2 is cut off. There is no AF output from V2, and the receiver is quiet.

When a signal appears, there is rectification. Current flows through R3. A fixed part of the voltage drop across R3 is applied to the grid of the triode section. A variable part of the voltage is also applied to the grid of V2. The variation is by MVC.

The voltage applied to the grid of the triode

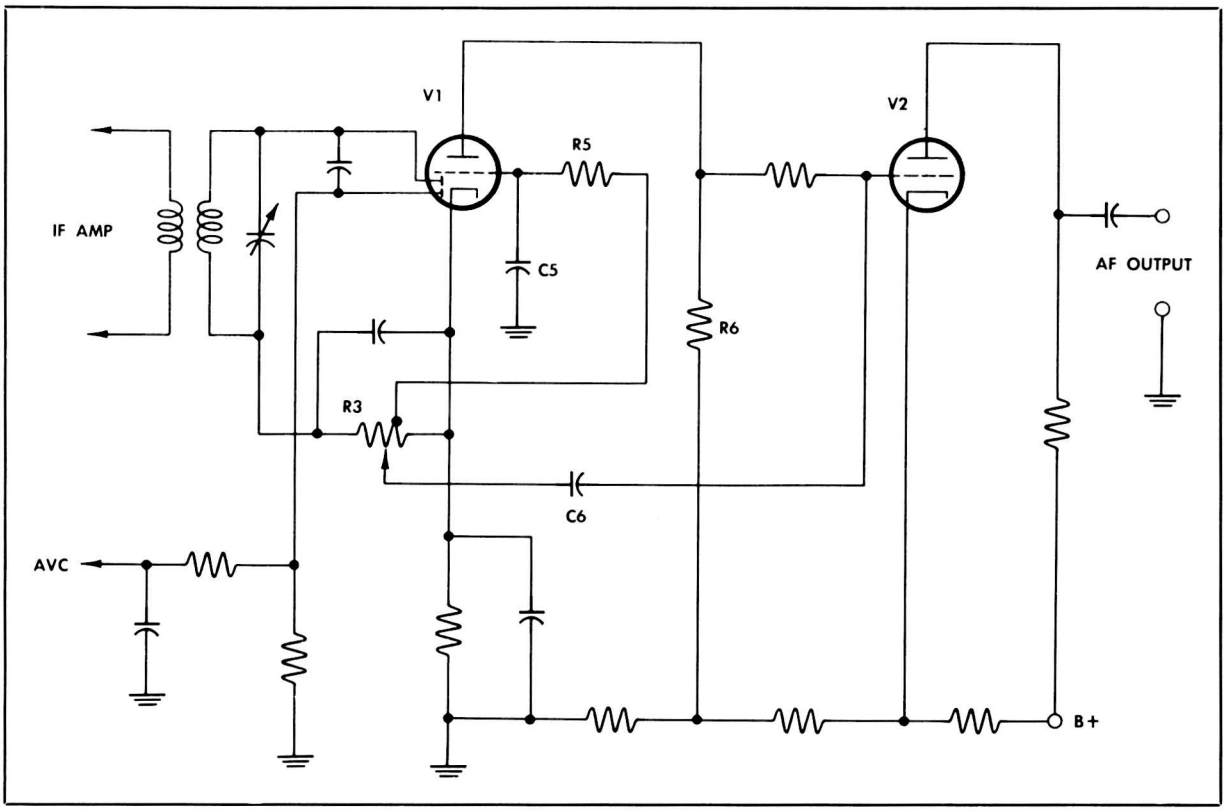

Basic Squelch Circuit

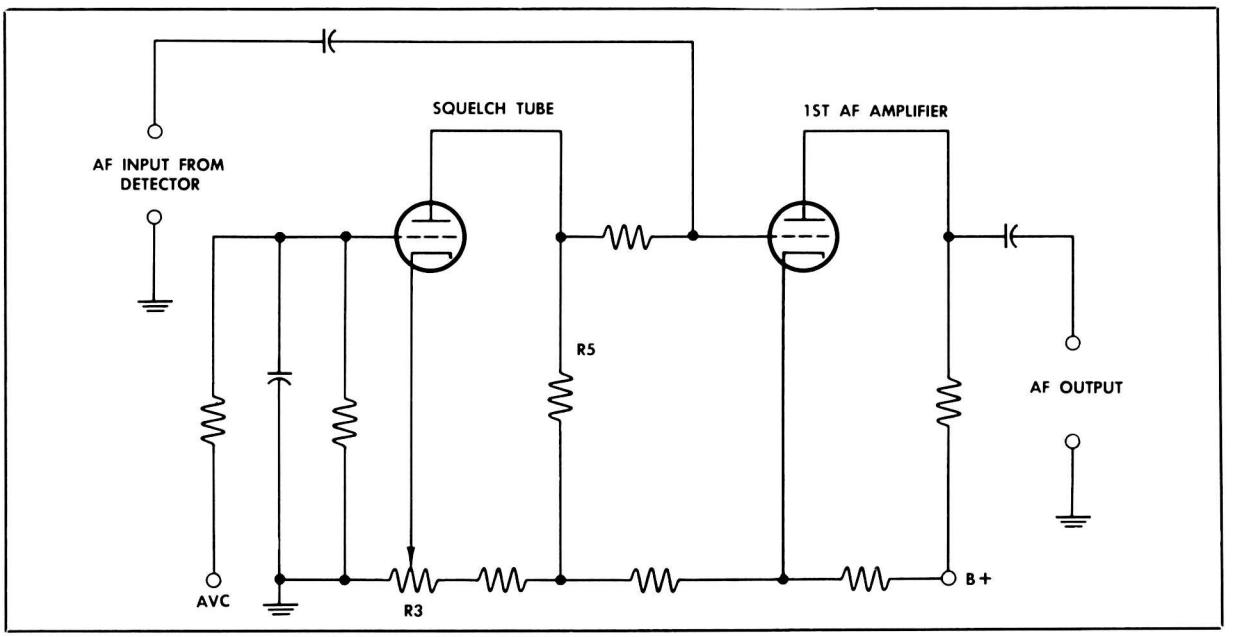

Squelch Circuit Controlled by AVC

section of V1 biases it practically to cutoff. C5 and R5 form a filter for this bias voltage. C5 bypasses the audio component of the bias voltage to ground. Thus, the bias on the triode section is a DC bias set at about cutoff. Plate current almost ceases. This means that the voltage drop across R6 which is applied to the grid of V2 almost disappears. The bias voltage on V2 thus becomes much more positive. This brings V2 out of cutoff, and it can now amplify the rectified AF signal coupled to its grid through C6. Thus, the signal is passed on to the AF output.

Note that the AVC circuit uses one diode section of V1 and is independent of the squelch circuit.

Squelch Circuit Controlled by AVC

Now examine the squelch circuit above. This circuit is controlled by the presence or absence of AVC. With no signal, no AVC voltage is applied to the grid of the tube, and the squelch tube conducts. The only bias on the tube is cathode bias obtained from variable resistor R3. The plate current of the tube flows through R5. The voltage drop across R5, applied to the grid of the AF amplifier, cuts off that tube, and there is no AF output.

When a signal appears, an AVC voltage is developed. Part of this voltage is applied to the grid of the squelch tube. This increases the bias on the tube and reduces plate current. As a result, the voltage drop across R5 decreases. This raises the grid voltage of the first AF amplifier, and it conducts. It then amplifies the AF signal coupled to it from the detector.

TUNING AND SIGNAL STRENGTH INDICATORS

An indicator to show relative signal strength can be very helpful in the operation or alignment of a communications receiver. Two types of indicators are in use. One, the signal strength meter (S-meter), is calibrated to show the strength of any signal. It can be used for tuning since it shows when a signal is strongest. The other, the tuning indicator, is not calibrated but it shows when any signal is at its strongest. Hence it indicates correct tuning.

S-Meter Circuits

The S-meter is essentially a milliammeter designed to indicate signal level. Usually the dial is calibrated from 0 to 9, with each suc-

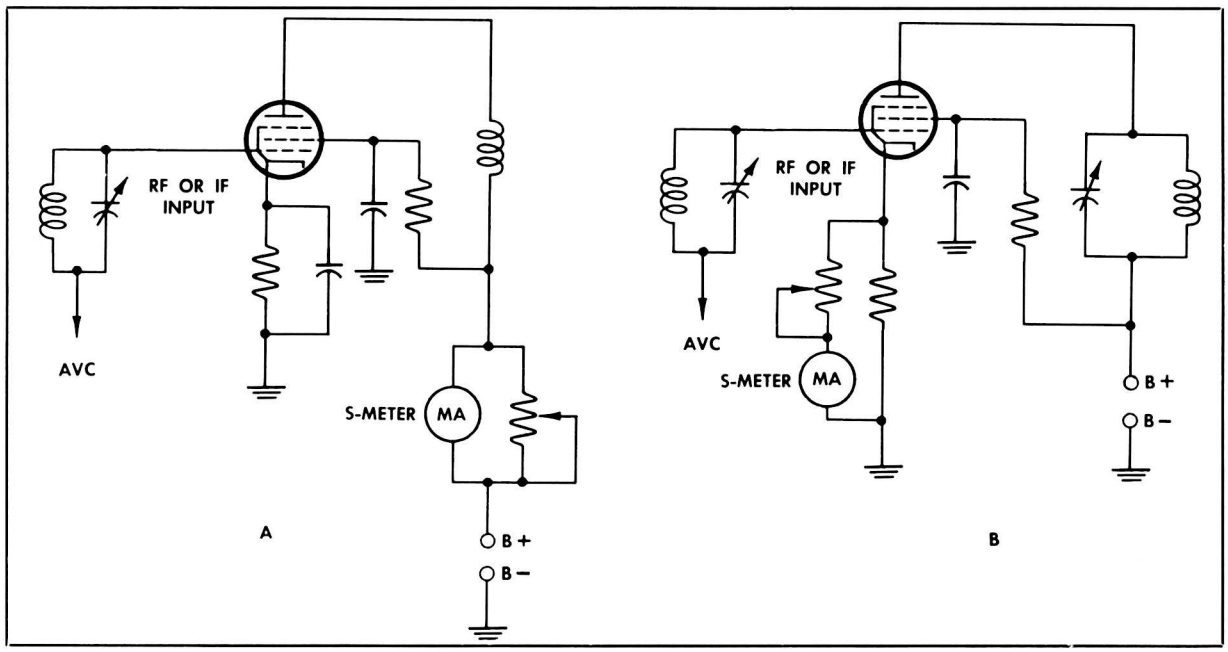

Signal Strength Meter

ceeding point indicating a doubling of signal level.

Notice the two common methods of S-meter placement. At A above, the meter is placed in the plate circuit of a variable-mu tube. A movement of 0-200 microamperes is used, and a variable shunt resistor makes possible zero adjustment for no signal response. At B, the S-meter is located between cathode and ground. It uses a movement of 0-1 milliampere in series with a variable resistor. It is in parallel with the cathode bias resistor.

In both cases, the tube operates class A. Therefore, the only time there is a change in plate current is when AVC is applied to the grid. With a large signal, the AVC voltage becomes greater and increases the bias on the tube. This reduces the plate current and causes the proper reading on the S-meter. Consequently, the meter must be arranged to show

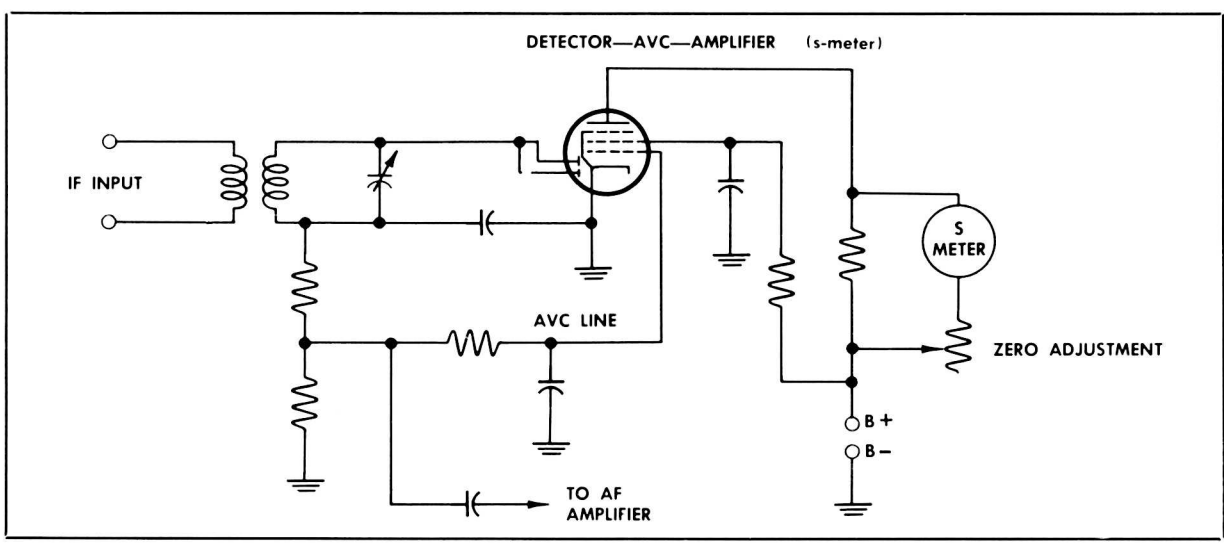

S-Meter With Separate Amplifier

minimum signal strength when current is maximum (no signal and no AVC), and maximum signal when current is minimum (maximum signal and maximum AVC). The meter movement is the reverse of that in the usual milliammeter. To read left to right on increasing signal strength, the meter deflects from right to left when current is increased. Such a meter is called a right-zero meter.

Sometimes the S-meter is used with a separate amplifier circuit. Notice in the diagram at the bottom of page 57 that a multielement tube is used. The AVC voltage is applied to the control grid of the pentode section of the tube. Since the AVC voltage is negative, an increase in signal strength causes a decrease in plate current.

Only a small part of the current, probably about one tenth of the total tube current, flows through the meter. The meter response is not perfectly linear, but the meter dial is calibrated according to the characteristics of the tube used in the amplifier circuit.

The S-meter can also be located in the AVC rectifier, as shown below. A portion of the diode current flows through the meter. Here, signal strength is in proportion to current flow, and the meter is calibrated for left-to-right deflection.

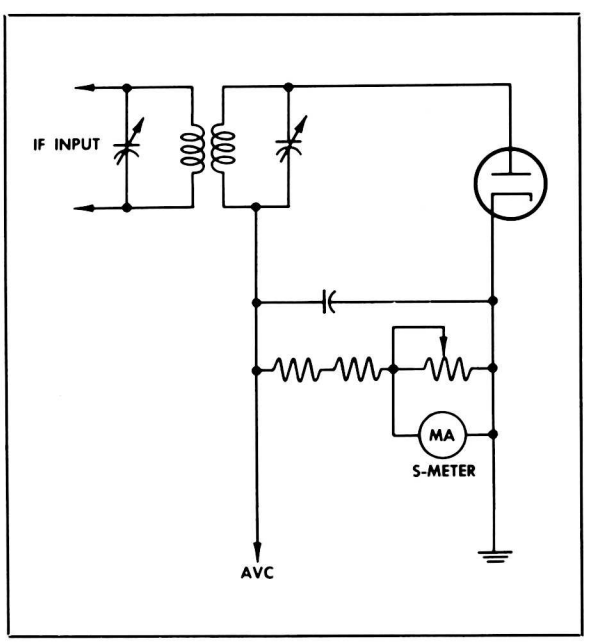

S-Meter in AVC Circuit

Tuning Indication with Electron Ray Tube

Though not as common as S-meters, electron ray tubes are used in some communications equipment. The electron ray tube is not intended as an accurate signal strength indicator. It is a tuning indicator that shows when a signal is tuned to maximum strength. As shown in the circuit diagram below, the indicator responds to the AVC voltage applied to the grid of the triode section.

The triode amplifies the AVC signal. But the plate of the triode section serves also as control grid of the indicator section. (Notice the connection between the plate of the triode section and the grid of the indicator section.) The indication on the fluorescent target is controlled by the difference in potential between the deflecting probe (the control grid of the indicator section) and the fluorescent target (the plate of the indicator section).

If the probe and target are at the same potential, the electrons flowing from the cathode to the target are not deflected. Consequently, the electron shadow of the deflecting probe appears only as a dark line on the target. This is the condition that exists when a large AVC voltage prevents the triode section from conducting.

With little or no AVC (little or no signal

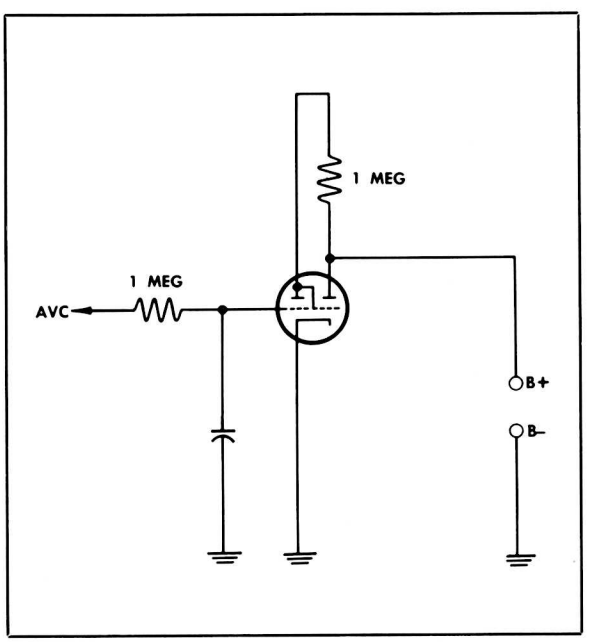

Electron Ray Tube Circuit

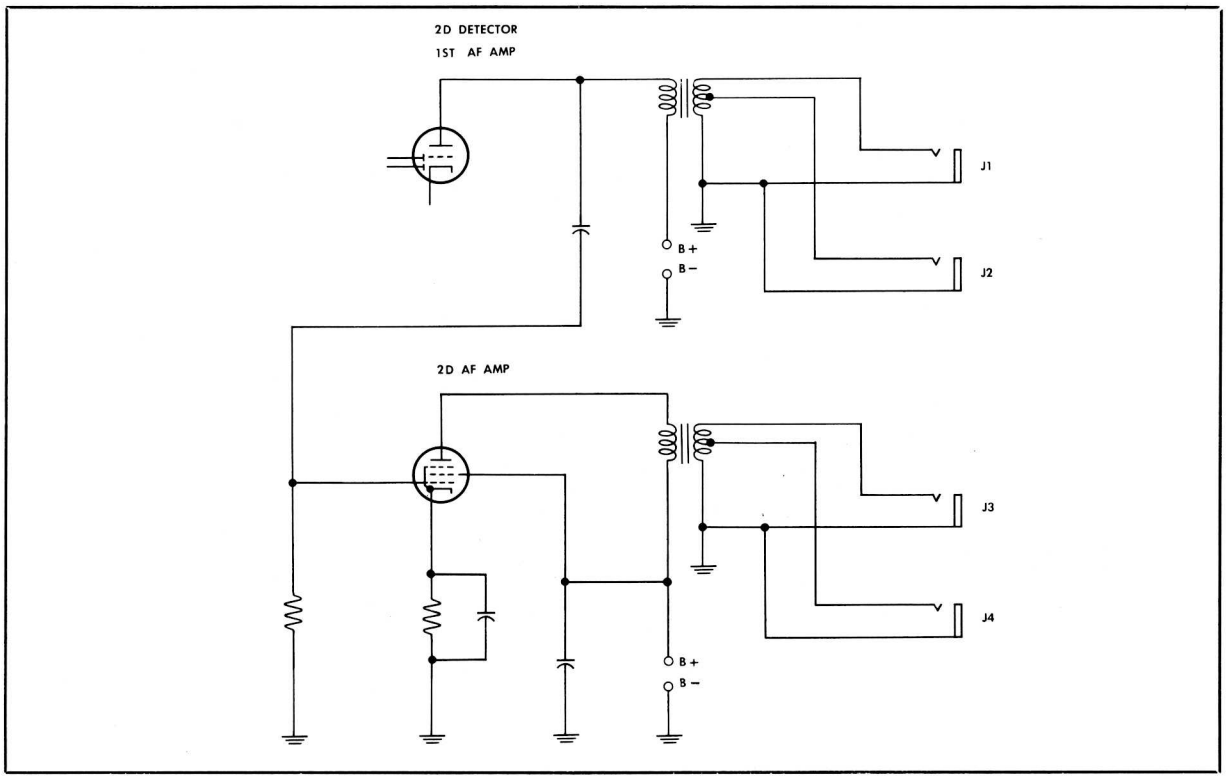

Provision for Headset Reception

getting through), the triode section conducts and there is voltage drop across the 1-megohm resistor. The voltage drop puts the two plates at different potentials. Since the deflecting probe is connected to the triode plate, its voltage is below that of the target plate. It therefore acts as a grid between the cathode and the target plate and causes a wide deflection of the electron beam and a wide pie-shaped shadow on the target. This indicates that the receiver is not exactly tuned to the station.

CIRCUITS FOR AUDIO REPRODUCTION

Communications receivers have various arrangements for reproduction of intelligence. These arrangements are sometimes quite complicated. The receiver may serve a number of headsets. It may serve loudspeakers. It may serve a combination of headsets and speakers. The audio section of the receiver may also serve as part of an intercommunications system between different receiving sites, or receiving and transmitting sites.

Headset Circuits

Examine the above diagram showing four headset jacks. Provision is made for using any of four different types of headsets. The output of the 1st audio amplifier is obviously less than the output of the second. However, the output of the first amplifier may be sufficient to drive high sensitivity headsets. If the high sensitivity headset is a high impedance type, J1 should be used. If the high sensitivity headset is of the low impedance type, J2 would be used. The output of the 2d audio amplifier would be used to drive headsets of lower sensitivity. J3 is for headsets having high impedance and low sensitivity, while J4 is for use with headsets which have both low sensitivity and low impedance.

Headsets are coupled to the communications receiver by an iron-core transformer. Such transformers provide for impedance matching. They also isolate DC from the headsets.

Communications receivers used for military operations have enough power to provide output at one or more remote positions.

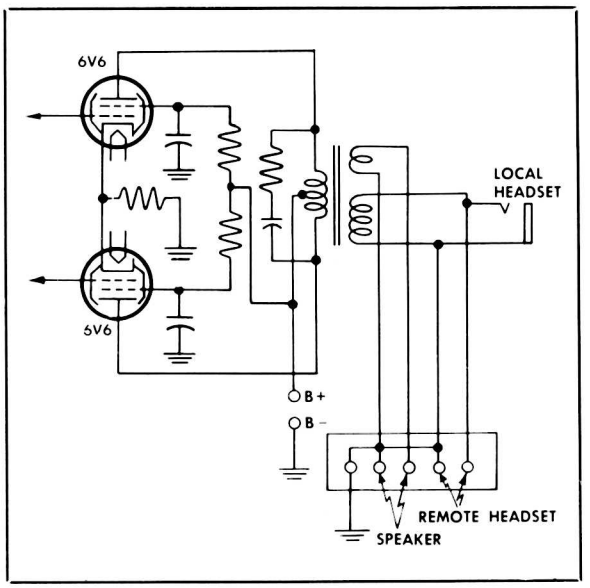

AF Output Circuit

Speaker Circuits

Most speakers used with Air Force equipment are mounted in a separate case. The output transformer is mounted in the receiver, and the receiver is rated according to the output impedance of the output transformer. This permits selection of the proper speaker to be used with it. The output impedance must be low, for the impedance of the voice coil of a speaker is very low—4 to 15 ohms. The voice coil is wound around the permanent magnet, but does not touch it. The voice coil is attached to the cone of the speaker so that it causes the cone to vibrate as the AF current flow in the voice coil sets up magnetic fields which alternately oppose and reinforce the magnetic field of the permanent magnet. Under such conditions, the voice coil must be small and thus of low resistance. When the impedance of the voice coil is not known, an approximate impedance of 1.25 times the DC resistance can be used.

Impedance matching is achieved in the output transformer of the receiver. To see how it is worked out, follow the example below. Suppose a receiver with a 6V6 power amplifier is to be coupled with a 6-ohm voice coil. The recommended load impedance of a 6V6 (from a tube manual) is 5,000 ohms. The necessary turns ratio of the transformer can be determined by the formula,

$$\frac{Np}{Ns} = \sqrt{\frac{Zp}{Zs}}$$

Substituting the figures,

$$\frac{Np}{Ns} = \sqrt{\frac{5{,}000}{6}} = 28.8$$

For a 6V6 to be coupled to a 6-ohm voice coil, the output transformer should have a practical turns ratio of 29 1.

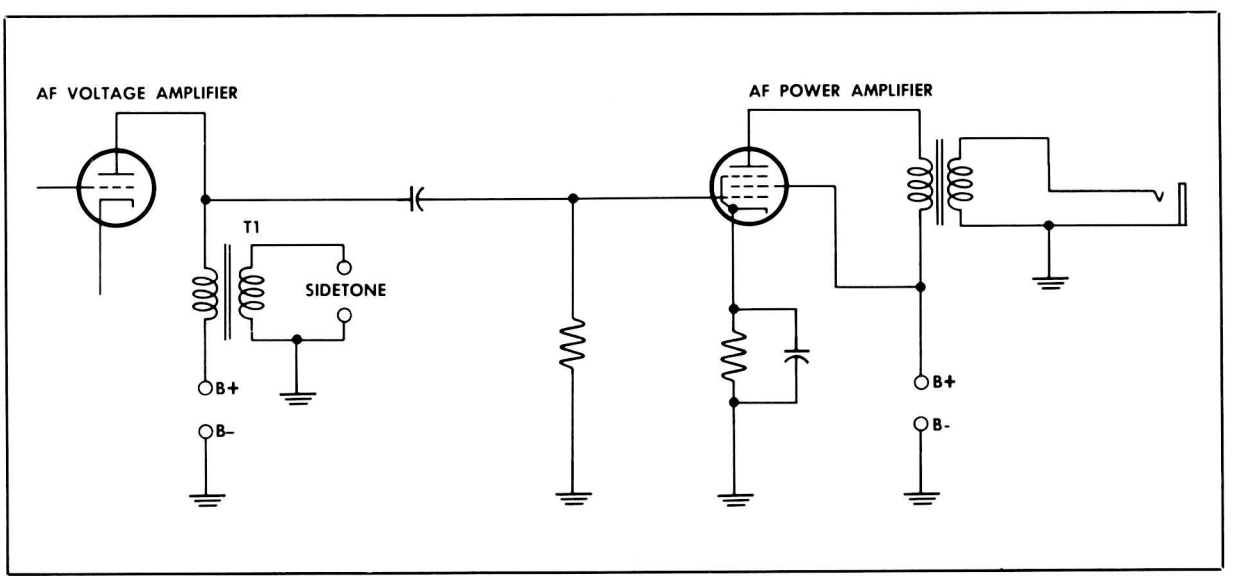

Coupling Sidetone to Receiver

To see how an arrangement can be worked out for using a speaker as well as headsets, look at the diagram AF Output Circuit. Notice that the secondary winding used for the speaker has few turns. The speaker winding leads are brought out to a terminal board. A separate, secondary winding of more turns provides for the use of local headsets and remote headsets as well.

An output transformer also helps increase the signal-to-noise ratio. Noise tends to be at the higher audio frequencies, and the impedance of the coils increases with frequency. However, this situation is often modified in order to establish a more constant load impedance over the entire AF range. This is done by placing a capacitor of about 0.003 mfd in parallel with the primary. Then, as the impedance of the coil rises with frequency, the impedance of the capacitor decreases. In the circuit diagram, a resistor is in series with the capacitor. The resistor decreases the Q of the circuit and flattens the response for more even handling of a broad band of audio signals.

Circuits for Auxiliary Use of Audio Section

Some communications receiver circuits are arranged to provide audio amplifier action for accompanying equipment. For example, a transmitter's sidetone may be coupled to a receiver so that the operator can monitor his own transmissions. The receiver amplifies the sidetone and reproduces it in headsets or a speaker.

Notice the receiver circuit on page 60 for coupling a transmitter sidetone to headsets. The sidetone is coupled through transformer T1 to the plate circuit of the first AF amplifier. Then, depending on the position of the receive-send switch, the headsets will provide either transmitter monitoring or receiver reception.

Auxiliary equipment can be used with the receiver through a switching arrangement. As an example, see the below diagram of the phono jack at which an AF signal may be injected. When auxiliary equipment is connected to the receiver at the phono jack, the AF amplifier is disconnected from the detector. MVC then controls the signal strength of the auxiliary equipment.

COMMUNICATIONS RECEIVER POWER SUPPLIES

Communications receivers usually take advantage of an AC source of power whenever it is available. A power supply unit, often

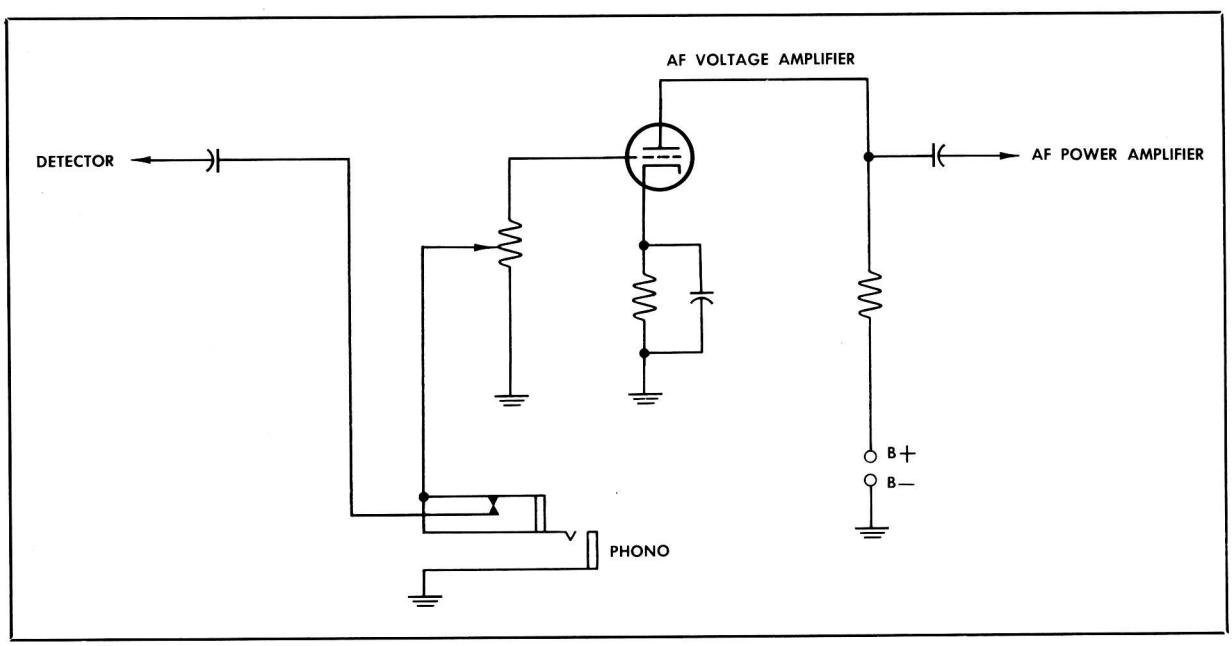

Using Receiver As Audio Amplifier

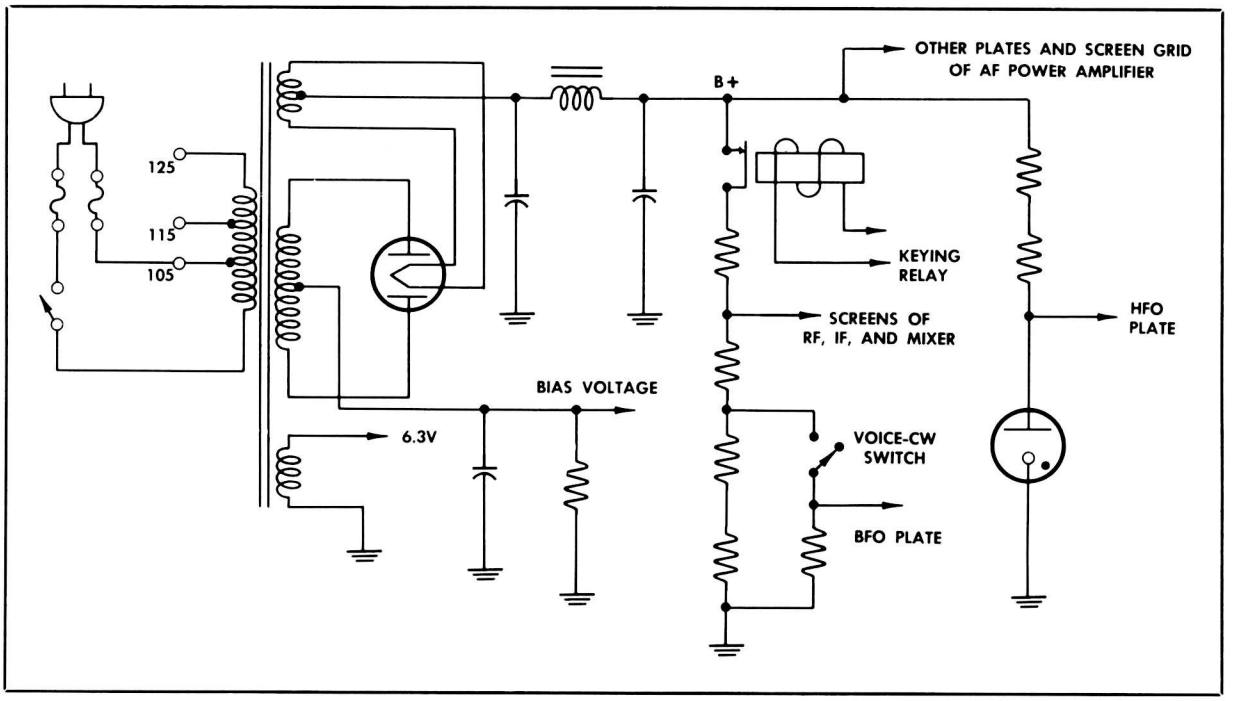

Typical Receiver AC Power Supply

a separate unit in communications receivers, applies the DC to the receiver. It steps the AC voltage up or down by transformer action when necessary, rectifies it, and filters it to provide correct DC potentials. However, for many communications receivers, particularly those used by the Air Force, an AC source is not available. Then, a DC source of power is used. Sometimes batteries alone are used. More often a battery-generator DC source is used. Dynamotors and vibrators are also employed to convert low voltage DC to high voltage DC.

Communications receivers operated where no commercial source of AC is available may be supplied with AC by gasoline-driven generator units. These units are started by batteries which, in turn, are charged by the generator while it is in action.

AC Power Supplies

Examine the power supply circuit shown above. It has a relatively complex DC voltage distribution. It contains the typical full wave rectifier circuit, filter circuit, and voltage divider circuit. It also contains a voltage regulator circuit to provide stable plate voltage for the HFO. The voltage divider provides screen voltages for the RF, IF, and mixer tubes. The keying circuit opens the voltage divider circuit to remove these voltages when the transmitter is keyed.

DC Power Supplies

BATTERIES. Portable receiver equipment operates directly from batteries. A heavier receiver may operate from batteries on an emergency basis. To see how the connections are made for a receiver that can be battery operated in an emergency, look at the diagram on page 63. The receiver has a terminal strip to which the battery cable can be connected. One 45-volt battery supplies bias voltage. Five 45-volt batteries in series provide a 225-volt supply. A lead taken from two of the batteries in series provides a 90-volt B+ supply. A 6-volt battery supplies filament voltage. Terminals 2 and 8 of the receiver terminal strip are connected so that the application of filament voltage as well as bias voltage can be controlled by the switch. Since the tubes draw no current until filament voltage has been applied, the application of B+ is not controlled by the switch.

GENERATORS. In aircraft, DC power is supplied mainly by engine-driven generators. By gear reduction, the high rpm of the engine is matched to the speed of the generator. Provision is made to supplement battery and generator with either outside or auxiliary sources of power during periods of radio operation or adjustment when the engines are not in operation. A battery cart is an example of an outside source.

When no outside source is available, it is necessary to use the auxiliary power unit consisting of a gasoline-driven DC generator. You can see the interrelation of battery, generator, auxiliary, and outside power units in the circuit diagram on page 64. The battery is of the lead-acid type, rated at 24V, 34 amp. The battery, or an outside power source, or an auxiliary source, can be used to operate the radio equipment or the starter. When the engines have started, the generator operates the radio equipment. It also charges the battery. In large aircraft, more batteries are used. They are connected in parallel so that the voltage is the same, but the current capacity is the total of that of the individual batteries.

Notice the switches for such an arrangement in the diagram on page 65. There are three battery switches—a master battery switch and two other battery switches. There are also two battery relays. After the master battery switch has been thrown, either or both batteries may be used. Auxiliary and outside power sources may also be used. All buses are connected to the positive leads of the power sources. The negative leads of all power sources are grounded to the metallic framework of the aircraft, which serves as the negative return of all circuits. All electrically operated equipment is grounded, and all metallic parts of the aircraft are bonded together.

The generator unit, as shown in the dia-

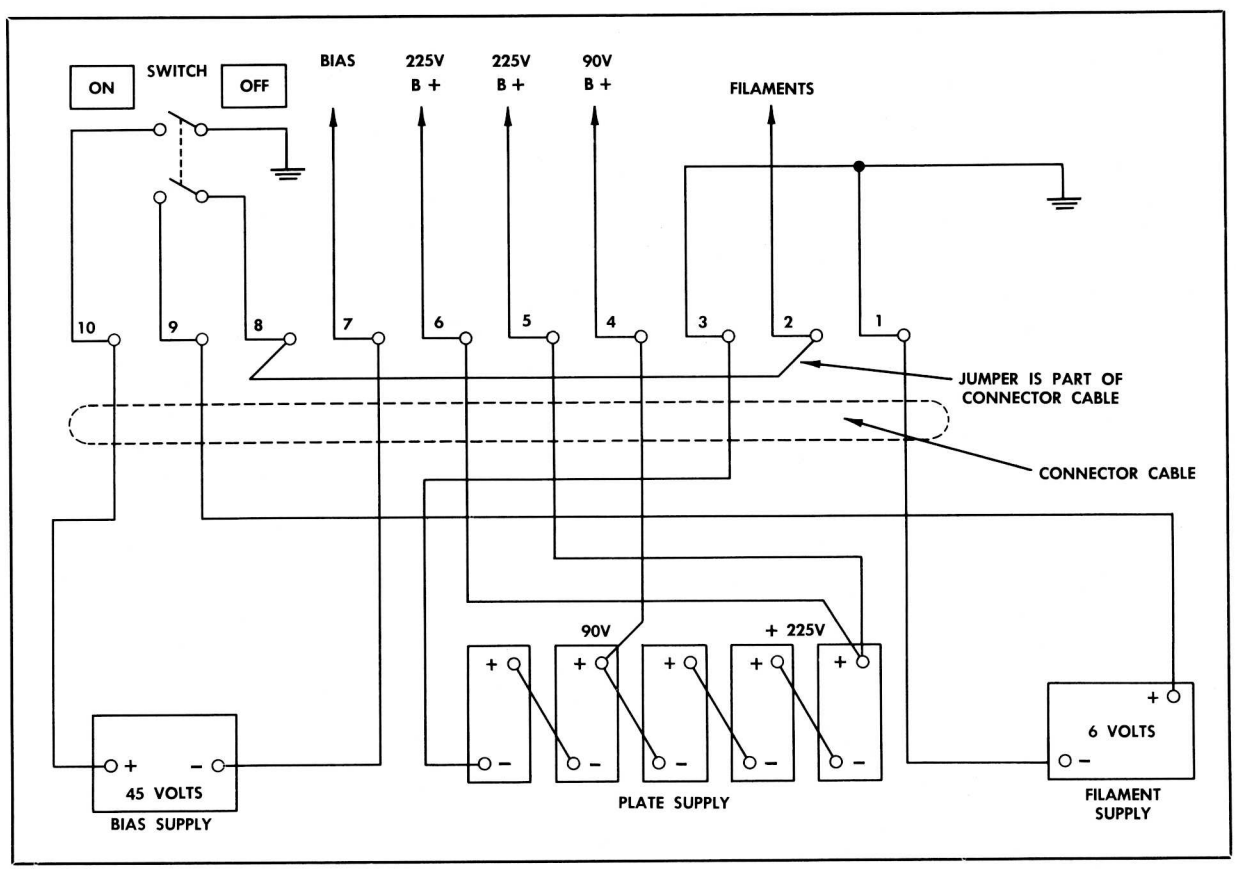

Emergency Operation of a Receiver on Batteries

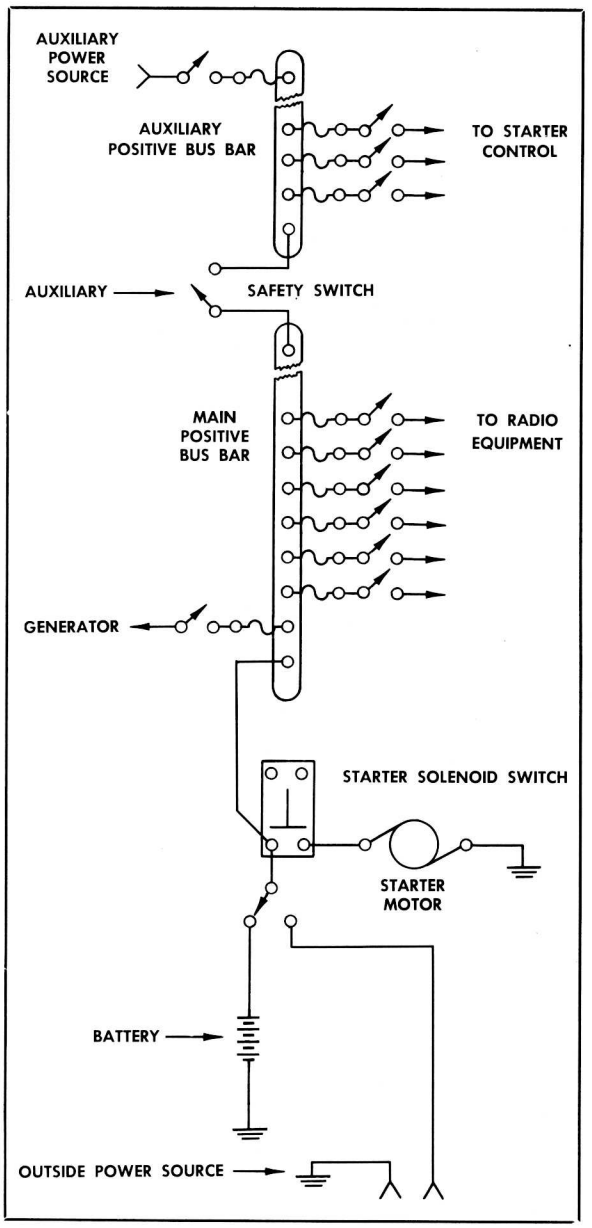

Aircraft Power Distribution System

gram on page 66, is governed by three electrical systems of control. There is a voltage regulator, a current limiter, and a reverse current cutout.

Voltage Regulator. Since most of the electrical circuits are designed to operate within a definite range of voltages, the voltage regulator is necessary to maintain a voltage within these limits. When the generator is not operating or when its voltage is quite low, the springs, S1 and S2, hold the contact points, P1 and P2, closed. These closed contacts put the armature and the field directly in parallel with each other.

As the voltage of the generator rises, the current through winding V increases and its iron core becomes more strongly magnetized. When the voltage reaches a value greater than desired, the magnetic attraction for the movable arm becomes strong enough to overcome the spring tension with the result that contact points P1 are separated. When this happens, the field current must flow through the reverse winding W and resistor R1. Because of the resistance which this adds to the field circuit, the current in the field decreases. The magnetic field of the generator is therefore weakened and the generator output voltage decreases.

The reverse winding W, which is connected in series with the field current resistor R1, is wound on the core in the reverse of the direction of the main voltage winding V. The purpose of the reverse winding is to speed up the operation of the contact points P1. When the generated voltage becomes sufficiently high to cause coil V to open the contact points, the current which then flows through W and R1 tends to demagnetize the core. Therefore, the contact points close much more quickly than they would if coil W were not used. The increased frequency of vibration (chatter) of the points results in a steadier terminal voltage. The difference between the peak and minimum values of voltage during each cycle of contact vibration is considerably reduced. The normal voltage output from the generator is 28 volts.

Current Limiter. The current limiter shown in the circuit diagram is also of the vibrator type. The current limiter is designed so that it automatically keeps the current drain from the generator within safe operating limits. If the generator were not protected in this way, the current drain might become so heavy that the generator would burn out.

Nearly all current which flows in the generator circuit flows through coil X. Spring S2 normally holds contact points P2 together. However, when the current through coil X

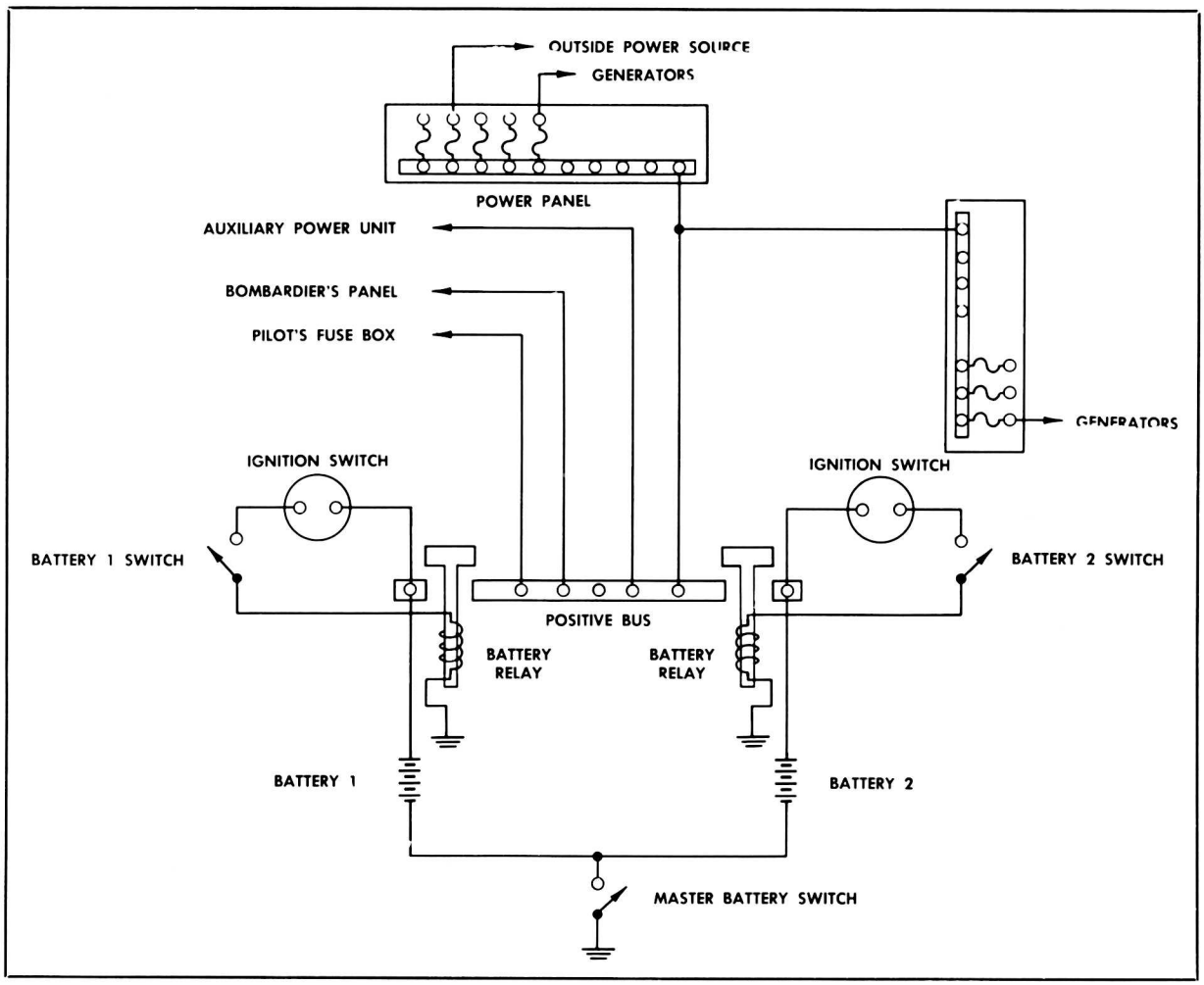

Connection of Batteries to Power Distribution System

becomes excessive, its iron core magnetizes to the extent that its magnetic pull on the movable arm overcomes the tension of the spring and opens contact points P2. This inserts the resistor R2 into the field circuit of the generator. This, in turn, decreases the field current and the strength of the magnetic field, and causes the generated voltage to drop. This will normally bring the generator current down to a safe value, and S2 will cause points P2 to close again. Thus, when the generator circuit is delivering large amounts of current, the current limiter will chatter in order to protect the generator.

Reverse Current Cutout. The purpose of the reverse current cutout relay is to connect the generator system to the aircraft electrical system whenever the generator voltage is greater than the voltage of the aircraft battery and to disconnect the generator from the aircraft battery when generator voltage is less than the battery voltage. This is necessary in order to prevent current flow from the battery into the generator system. When the generator is not operating, or when its voltage output is below normal battery voltage, spring S3 holds contacts P3 open. As generator voltage increases, current through winding Z builds up a magnetic field which causes contacts P3 to close. Then generator current may flow through the aircraft electrical system, P3, and coil Y. The generator current flowing through Y develops a magnetic field which

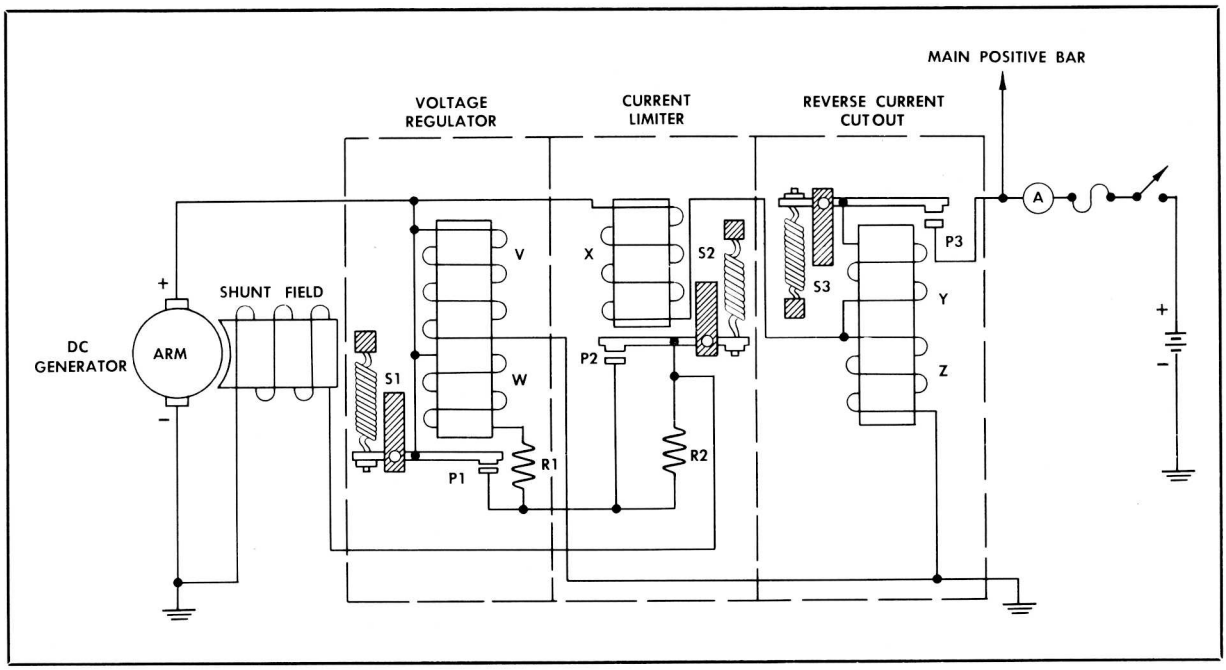

Typical Aircraft Generator Control System

aids the field created by current through winding Z. Therefore, contacts P3 are held firmly closed so long as current through Y continues in this direction. However, if the generator voltage were to decrease below battery voltage, the current flowing through Y would reverse its direction so that the magnetic fields developed in coils Y and Z would oppose and cancel each other. As a result, the armature holding one of the contacts, P3, would be released, spring S3 would open the contacts, and battery current would no longer flow through the generator system. The contacts would remain open until generator voltage again reached the voltage necessary to build up a magnetic field which would overcome the spring tension of S3. This spring tension is adjusted so that it will not be overcome by the pull of the magnetic field until the voltage across coil Z exceeds a certain value—usually a value slightly higher than the normal voltage of the battery.

During flight, the aircraft battery-generator system provides the airborne radio equipment with a 28-volt DC supply. Some equipment may operate directly from this supply, using tubes which require slightly less than 28 volts for B+.

However, most airborne equipment needs voltages in excess of 28 volts. A dynamotor provides one means of using the 28 volts provided by the generator to produce higher DC voltages. Some voltage outputs for typical dynamotors are 220 volts, 400 volts, and 750 volts. The efficiency of a dynamotor is low, frequently less than 40%.

A vibrator power supply can also be used to step up generator-battery voltage. Look at the two vibrator circuit diagrams shown on page 67. At A, the circuit is that of a non-synchronous vibrator. When the battery switch is closed, current flows through the magnet coil L1 and up through the lower half of the primary coil. The magnetic pull draws the reed down until it reaches the lower contact. When it touches the lower contact, the reed shorts electromagnet L1 which then loses its attraction. The reed then swings up to the upper contact, causing the current to flow down through the upper portion of the primary. But now, with L1 no longer shorted out, current again flows through L1 and up through the lower portion of the primary. Again the reed is attracted down to the lower contact. With the reed no longer in contact with the upper contact

point, current ceases to flow in upper portion of the primary. The process is repeated over and over again, and the reed vibrates continuously as long as battery voltage is applied.

Transformer action takes place as the secondary is cut by expanding and collapsing magnetic fields developed by the primary. The collapsing and expanding primary field induces an AC voltage in the secondary. Capacitor C2 across the secondary (called a buffer) absorbs the voltage surges caused by the very sudden collapsing and expanding of the primary field. Thus C2 smoothes out the secondary response. This resultant AC voltage is rectified by an electron tube rectifier.

The circuit at B illustrates a synchronous vibrator. It has a double set of upper and lower contact points. One pair of contacts is connected to the secondary and rectifies the secondary voltage. Thus, an electron tube rectifier is not needed. As the reed vibrates, first the top and then the bottom of the secondary is grounded. This means that the secondary current flows to the centertap of the secondary to ground, first up through the upper section of the secondary, then through the lower section. This action is synchronized with the collapse and expansion of the primary field. Here again, capacitor C2 acts as a buffer. L2 and C1, and L3 and C3, in their respective circuits, form RF filters to eliminate high frequency interference caused by sparking of the reed with the contact points.

OPERATION AND ANALYSIS OF TYPICAL COMMUNICATIONS RECEIVERS

Now that you've covered the special circuits of communications receivers, it is time for an overall look at complete circuits. For this purpose, the circuits of two actual Air Force receivers have been chosen. Naturally they will probably become outmoded. Still, the basic principles involved will undoubtedly be carried over in the receivers that replace them.

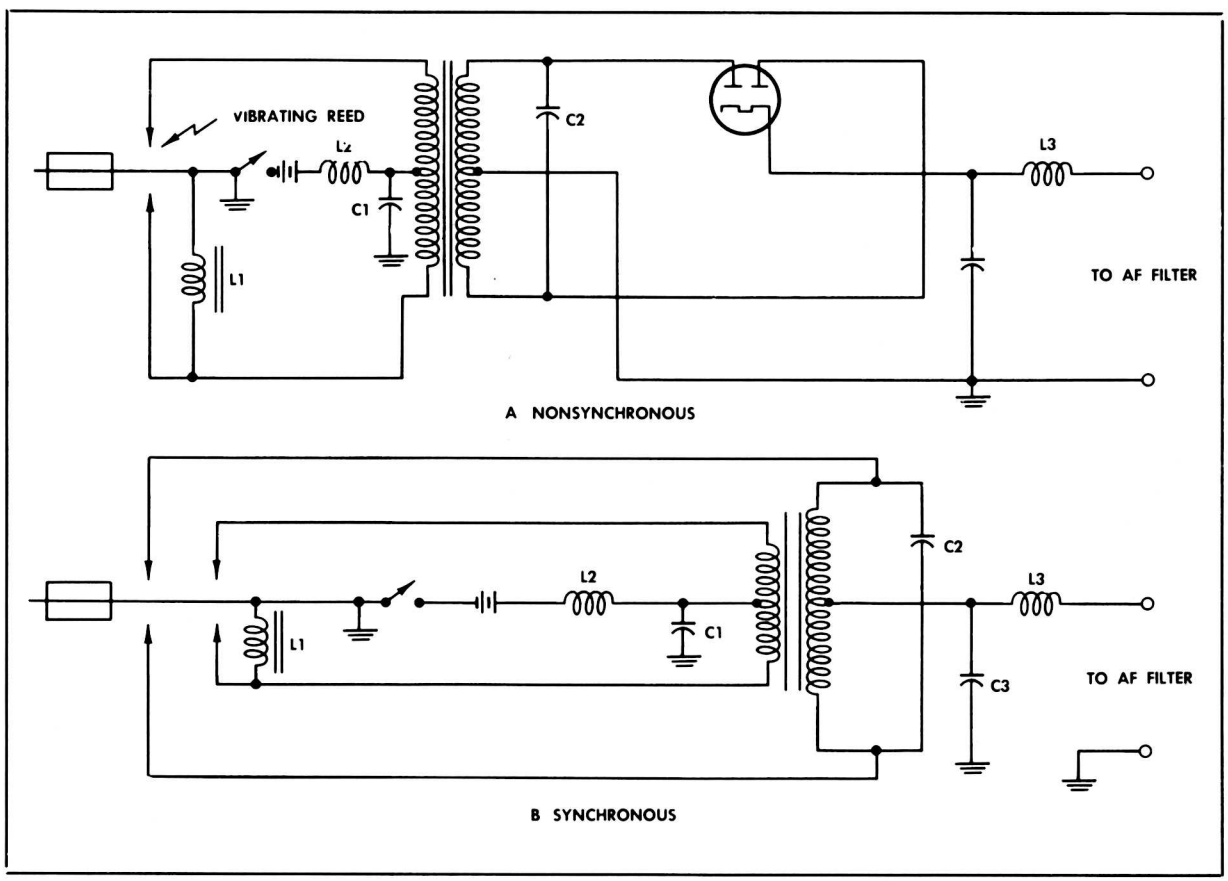

Vibrator Circuits

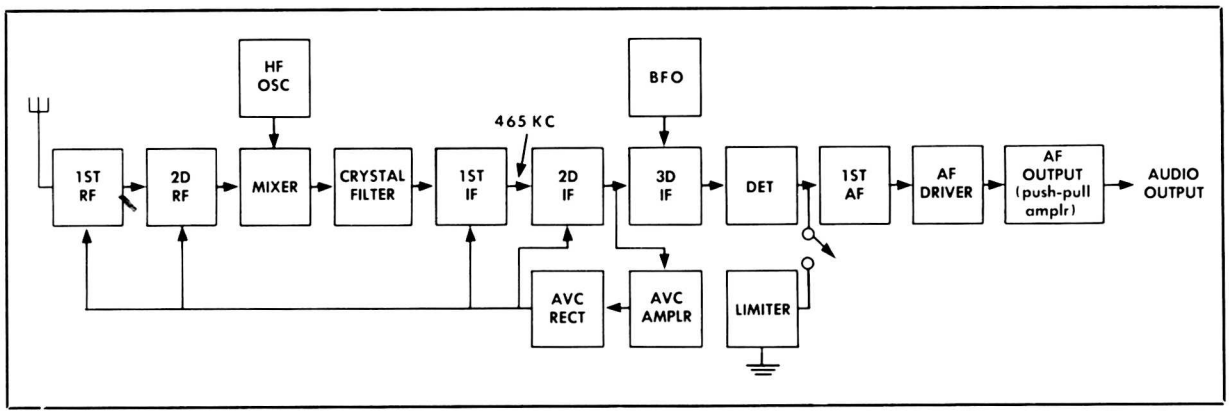

Receiver BC-779, Block Diagram

Air Force Receiver BC-779

The first of these receivers is a commercial unit. The Air Force designation is BC-779. The receiver is for ground installations.

Notice in the block diagram of the receiver above that it has two RF stages, three IF stages, and three AF stages. It has a separate channel AVC system. It uses a limiter stage but no squelch circuit. A separate power supply unit is necessary. The receiver is available in different frequency ranges, but all models use the same basic circuit.

Looking at the control panel below, notice first the five-position bandswitch. This permits selection of any one of five different frequency ranges. The switch also operates

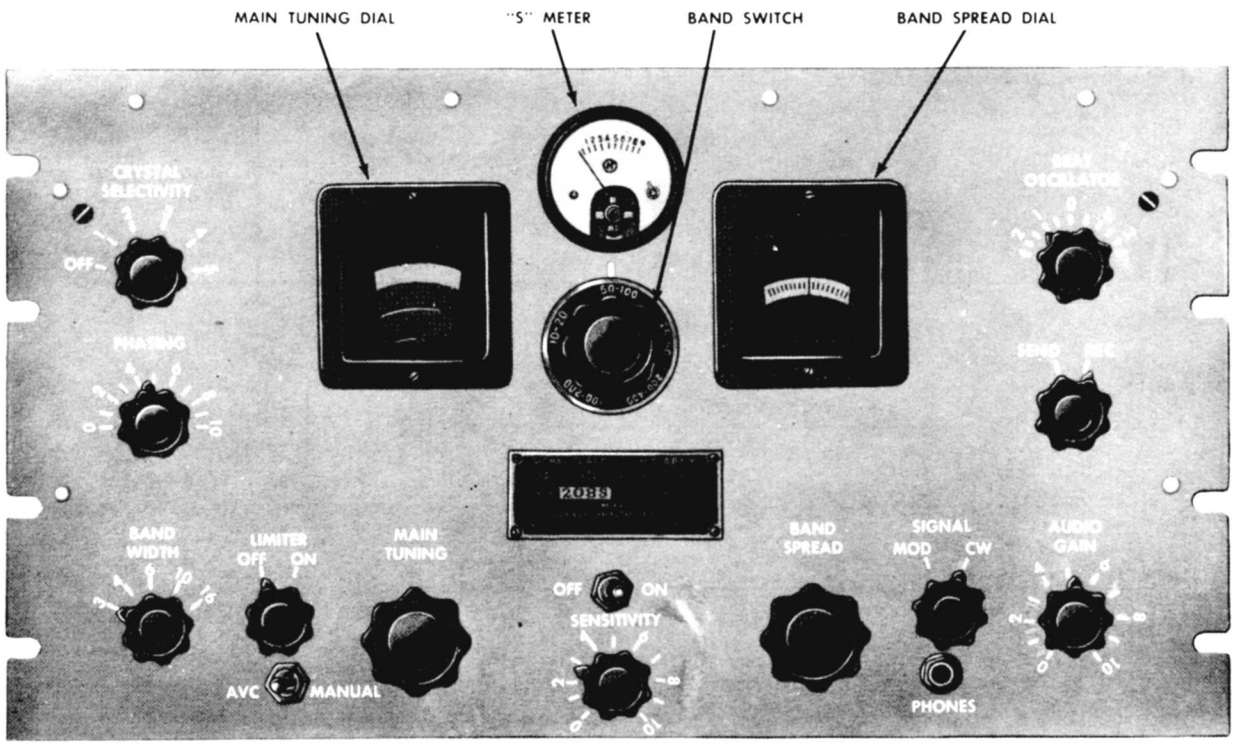

Receiver BC-779, Front View

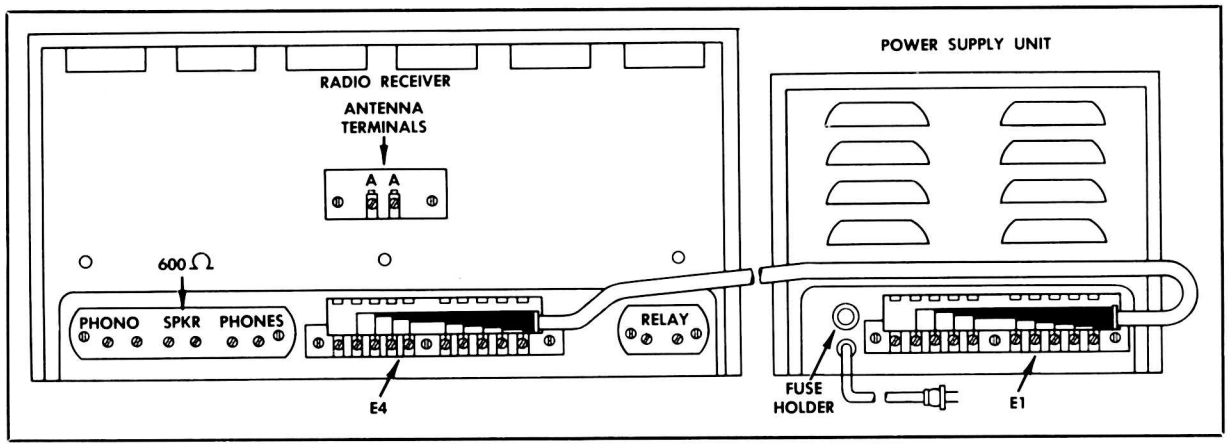

Receiver BC-779 and Power Unit RA-94, Rear View

a masking plate over the main tuning dial in order to expose only the calibration scale of the particular band selected.

The main tuning dial turns with the control beneath it. It is used to tune the receiver within the range of the band selected. The dial is illuminated from the rear.

The bandspread dial and the control beneath it are operated in conjunction with the tuning dial. The bandspread dial has a scale reading from 0 to 100. It is used to get fine tuning over a narrow band of frequencies.

The S-meter may be used when the receiver is operating on AVC. It can be used to log the strength of a received signal or to tune in a signal. It shows the greatest deflection when a signal is correctly tuned. The meter circuit is adjusted at the factory so that a change of one number on the calibration indicates a change in signal strength of approximately two to one.

The CRYSTAL SELECTIVITY control provides five degrees of crystal selectivity by varying the Q of the crystal filter circuit.

The PHASING control is used in conjunction with the crystal filter. With this control, the rejection notch in the crystal filter response can be moved in order to eliminate reception of image frequencies.

The BANDWIDTH control adjusts the bandwidth of the IF by changing the coupling of the IF transformers. Minimum bandwidth occurs at position 3, and clockwise rotation increases the bandwidth.

The LIMITER switch is an on-off switch which permits use of the limiter as desired. When the noise level is low, the limiter can be shut off.

The AVC-MANUAL switch permits disconnection of the AVC. Then manual gain control is available through the sensitivity control. In either position, the audio gain control can be used to vary the audio output.

The SIGNAL control permits a choice between modulated or CW reception. The BFO is turned on when the control is in CW position.

The BEAT OSCILLATOR control adjusts the frequency of the beat oscillator by varying a capacitor in the oscillator tuned circuit. Adjusting the oscillator varies the pitch of the audio tone signal.

The SEND-REC control can be operated when the receiver is used with an associated transmitter. In the SEND position, the receiver is silenced, though ready for instant use when the control is moved to the REC position.

The phone jack provides for connection of a headset to the receiver output. This jack is in parallel with the phone lugs on the terminal strip at the rear of the receiver.

Now look at the drawing of the rear of the receiver and power supply above. On the same terminal strip as the phone connections are the speaker connections and the phono connections. The phono terminals provide a means of using the audio section of the

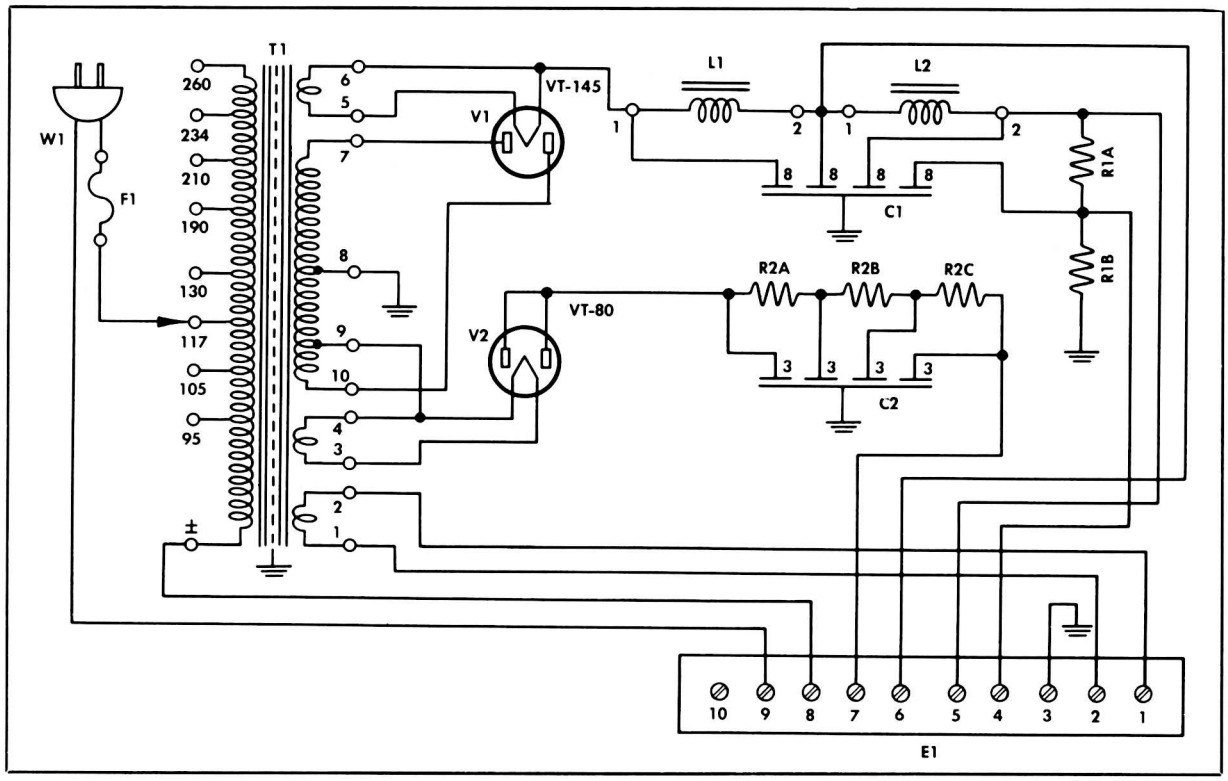

Power Unit RA-94C

receiver as an audio amplifier. Other terminal strips provide connections for the power cable, the antenna, and a relay to disconnect the receiver automatically during transmissions.

The overall schematic diagram shows the complete receiver circuit. The circuits for band switching are shown at the lower left. There are five sets of ganged input and output tuned circuits for the three RF amplifier stages and the high frequency oscillator. Each set of tuned circuits provides for one frequency band. The selection of the proper band is controlled by ganged switches, SW1A to SW1E.

Conversion is accomplished through a pentagrid mixer and separate oscillator.

A crystal filter is used between the mixer and the first IF amplifier. C32 is the variable phasing capacitor which counteracts the capacitance of the crystal holder. It can be varied to move the rejection notch in the crystal filter response curve. Crystal selectivity is controlled by SW7, a ganged switch which provides five degrees of selectivity. In the OFF position, the crystal is shorted. On position 1 the crystal filter is placed in the circuit. On each of the other four positions additional resistance is introduced into the crystal filter output parallel tuned circuit. Thus, in each position more and more resistance is placed in series with the filter (the parallel tuned circuit is purely resistive), and the Q of the filter decreases. The selectivity of the crystal filter circuit increases.

The bandwidth of the IF bandpass is controlled by ganged regulation of the amount of coupling in T2 and T3, the IF transformers.

The AVC has its own amplifier, operating with part of the output of the second IF amplifier. Plate current of the AVC rectifier flows through the S-meter when the AVC-MANUAL switch is in the AVC position.

The output of the BFO, a beat frequency, is injected into the plate circuit of the third IF amplifier. This means that the AVC voltage has already been coupled to an AVC amplifier and cannot be affected by the BFO. To insure that there is no stray coupling between os-

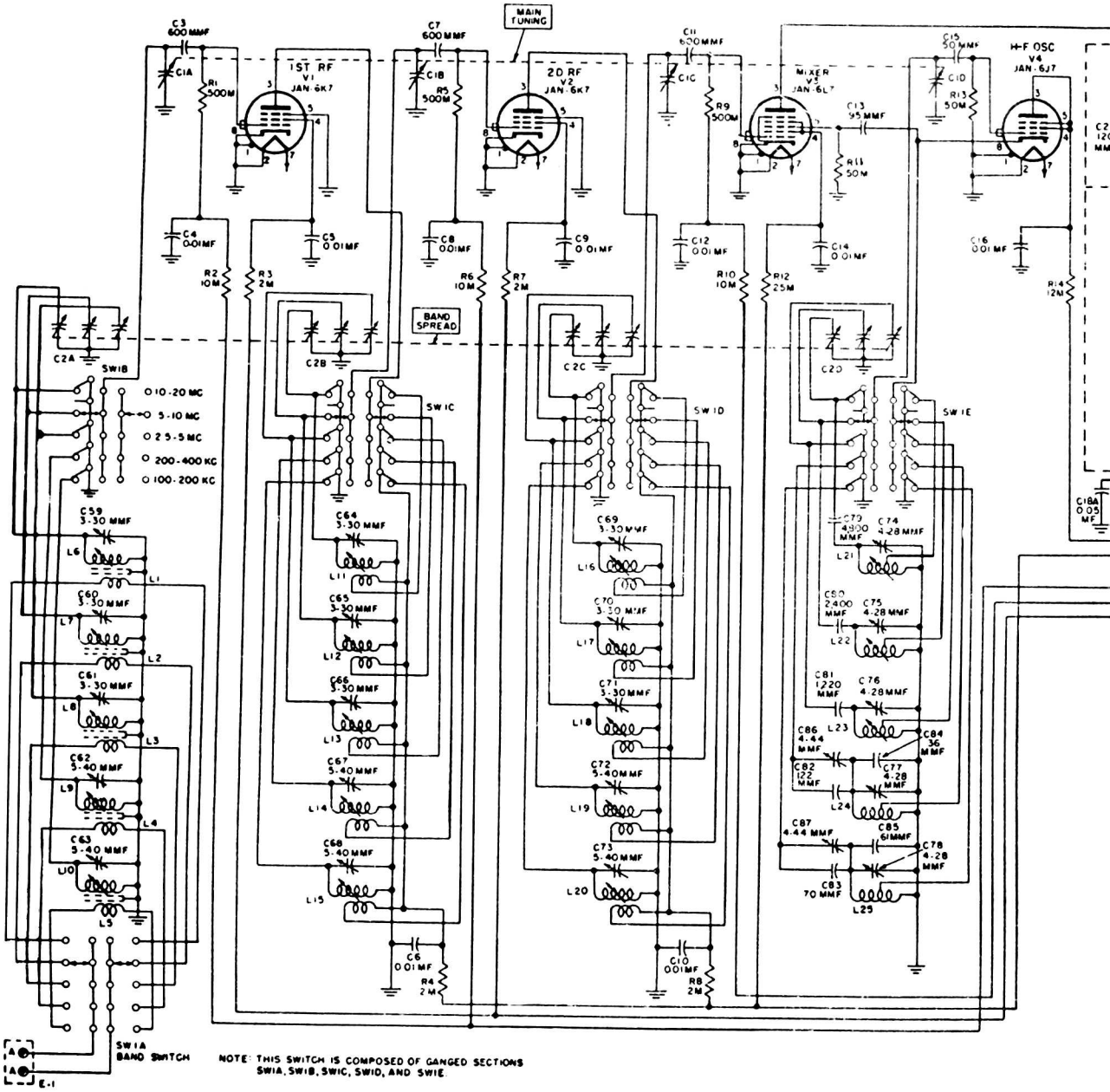

Schematic Diagram, Receiver BC-779-A, B